Sears

REPAIR PARTS LIST

Model No.(s)

110.29442801
(White)

Kenmore®

AUTOMATIC WASHER

The model number of your automatic washer is found on the serial plate located at the rear center of the lid well.

All repair parts listed are available for immediate purchase or special order when you visit your nearest Sears Service Center, or the Service Department at most Sears stores. To order parts by phone, call the toll free parts number listed to the left.

When requesting service or ordering parts, always provide the following information:

- Product Type
- Model Number
- Part Number
- Part Description

To Call
Toll Free
For Parts:

1−800−366−PART
(1−800−366−7278)

For Service:

1−800−4−MY−HOME
(1−800−469−4663)

Sears, Roebuck and Co., Hoffman Estates, IL 60179 U.S.A.

© 2009 SEARS, ROEBUCK AND CO.

01−09 Printed in U.S.A. (BT) (eeb)

Part No. W10249715 Rev. A

TOP AND CABINET PARTS

For Model: 110.29442801
(White)

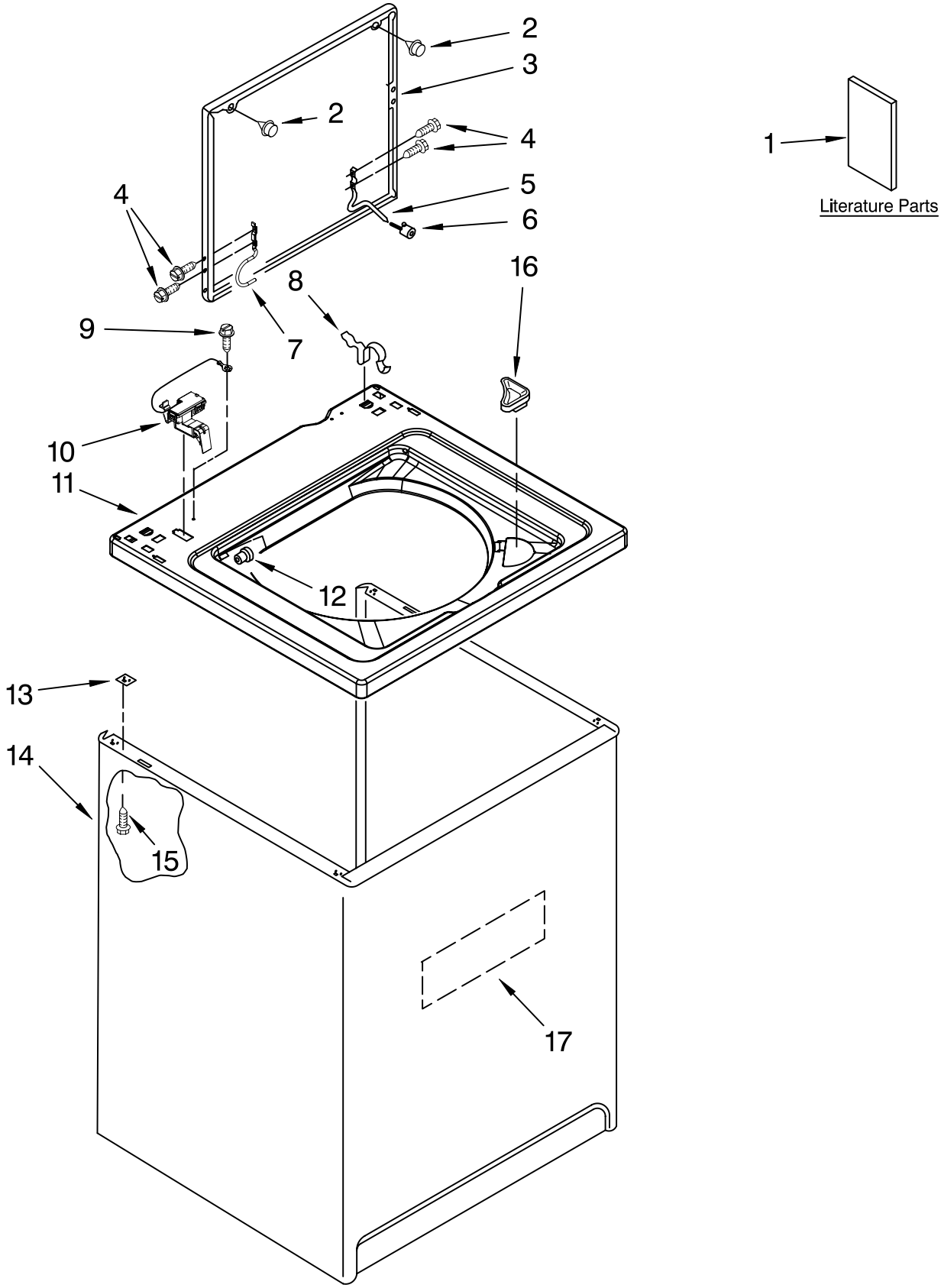

TOP AND CABINET PARTS

For Model: 110.29442801
(White)

Illus. No.	Part No.	DESCRIPTION
1		Literature Parts
	W10200332	Installation Instructions
	W10026670	Use and Care Guide
	W10026671	Quick Start Guide
	W10199994	Wiring Diagram
	W10052919	Energy Guide

Following May Be Purchased

DO−IT−YOURSELF REPAIR MANUALS

	4314044	Manual (Washer) Do−It−Yourself
2	9724509	Bumper, Lid (2)
3	8541774	Lid
4	W10119828	Screw, Lid Hinge Mounting (4)
5	54583	Hinge, Lid (R. H.)
6	19119	Bumper, Lid Hinge
7	W10225135	Hinge, Lid (L. H.)
8	62780	Clip, Top & Cabinet & Rear Panel (2)
9	3351614	Screw, Ground
10	8318084	Switch, Lid
11	8559483	Top
12	21258	Bearing, Lid Hinge (2)
13	62750	Spacer, Cabinet To Top
14	63424	Cabinet
15	W10165554	Screw, 10−16 X 3/8 (4)
16	3362952	Dispenser, Bleach
17	3349654	Cabinet, Sound Damper

CONTROL PANEL PARTS

For Model: 110.29442801
(White)

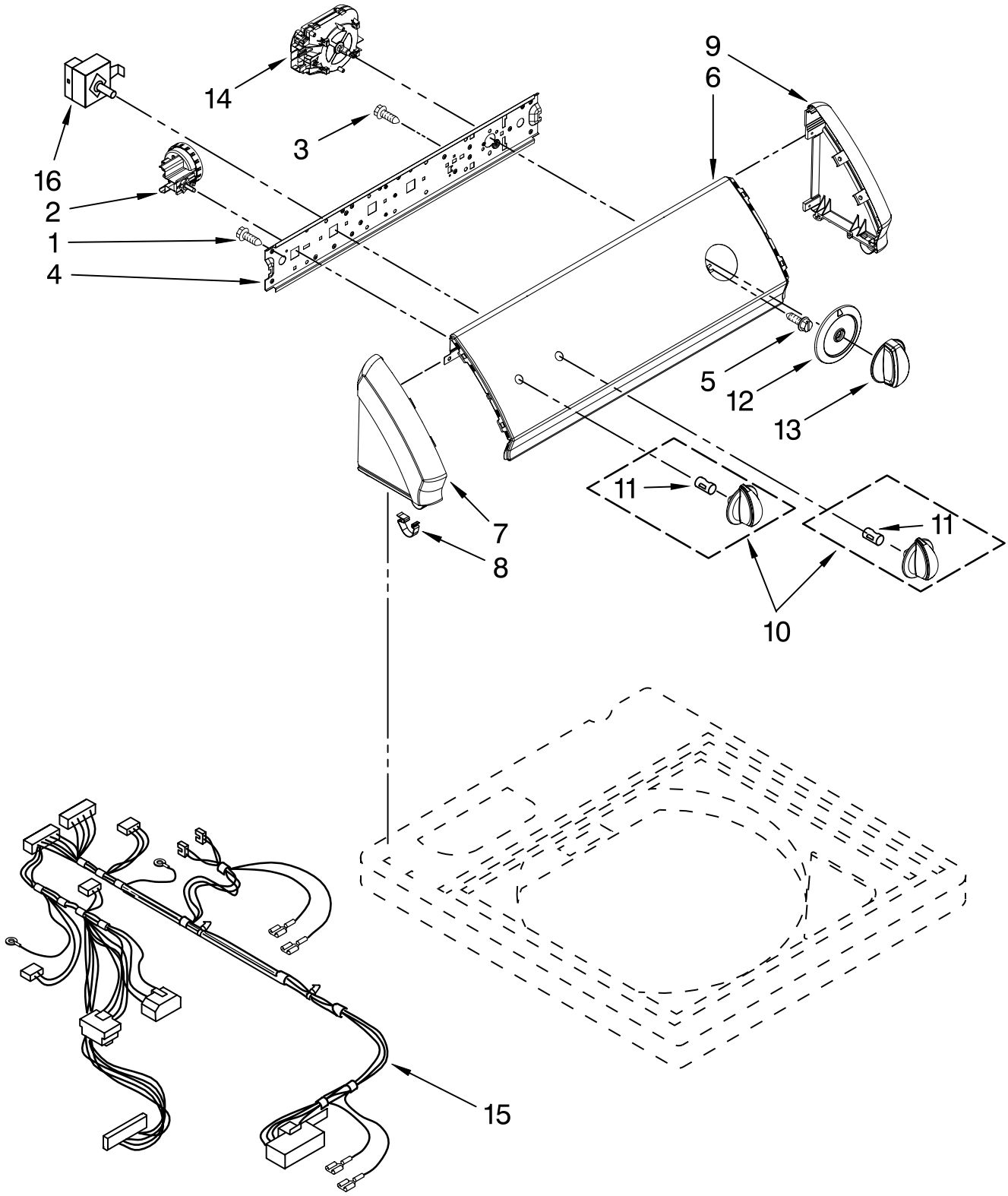

CONTROL PANEL PARTS

For Model: 110.29442801
(White)

Illus. No.	Part No.	DESCRIPTION
1	90767	Screw, 8−18 x 3/8
2	8577844	Switch, Water Level
3	3400073	Screw, Ground
4	8559504	Bracket, Control
5	3400818	Screw, Timer Mounting
6	W10025673	Panel, Console
7	8559502	Cap, End (L.H.) (Includes Item 8)
8	8312709	Clip, Console
9	8559501	Cap, End (R.H.) (Includes Item 8)
10	W10192636	Knob, Control
11	8536939	Clip, Knob
12	W10169848	Dial And Guard, Timer
13	W10169849	Knob, Timer
14	W10199989	Timer, 60 Hz.
15	W10206345	Harness, Wiring (For Detail See Pages 12 & 13)
16	W10184148	Switch, Water Temperature

REAR PANEL PARTS

For Model: 110.29442801
(White)

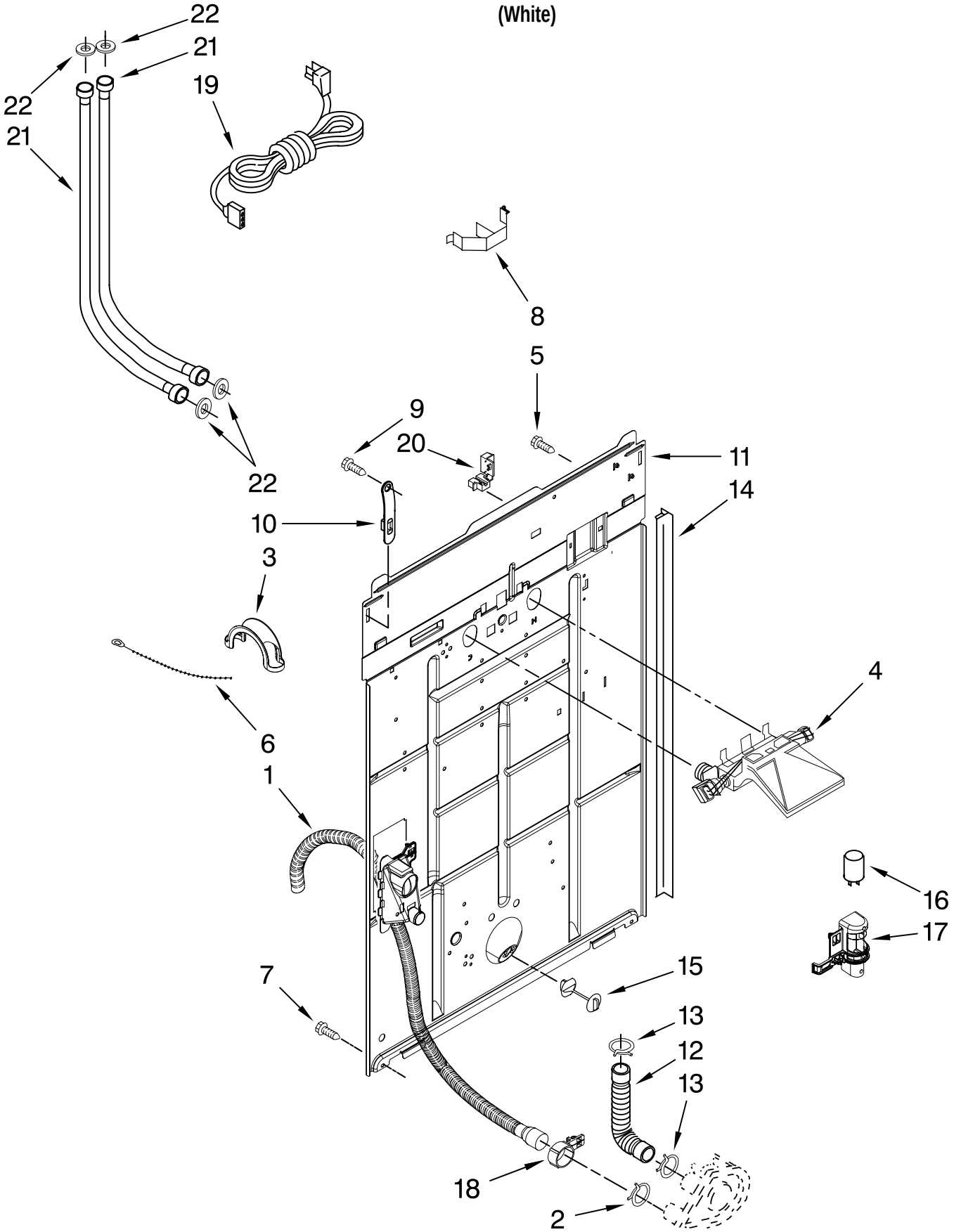

REAR PANEL PARTS

For Model: 110.29442801
(White)

Illus. No.	Part No.	DESCRIPTION
1	W10189267	Drain Hose Assembly (Includes Item 18)
2	8317496	Clamp, Hose
3	8577378	U−Bend, Drain Hose
4	W10144820	Valve, Water Inlet W/Vacuum Break & Thermistor
5	3351614	Screw, Ground
6	3347868	Cable Tie
7	62863	Screw, 10−16 x 3/8
8	8055003	Clip, Harness & Pressure Hose
9	90767	Screw, Strap To Panel (8−18 x 3/8)
10	8568314	Strap, Console (2)
11	W10194450	Panel, Rear
12	3951449	Hose, Pump To Tub (Includes Item 13)
13	3363366	Clamp, Hose
14	62747	Pad, Rear Panel (2)
15	8519200	Support, Rear Panel
16	8572717	Capacitor Motor Start
17	8318046	Clip, Capacitor
18	8541668	Clamp, Hose
19	3956162	Cord, Power (Includes Item 20)
20	3952821	Relief, Strain (Power Cord)
21		Hose, Water Inlet
	W10194208	Hose (Inlet), Blue
	8571378	Hose (Inlet), Red
22	W10242307	Washer, Inlet Hose

AGITATOR, BASKET AND TUB PARTS

For Model: 110.29442801
(White)

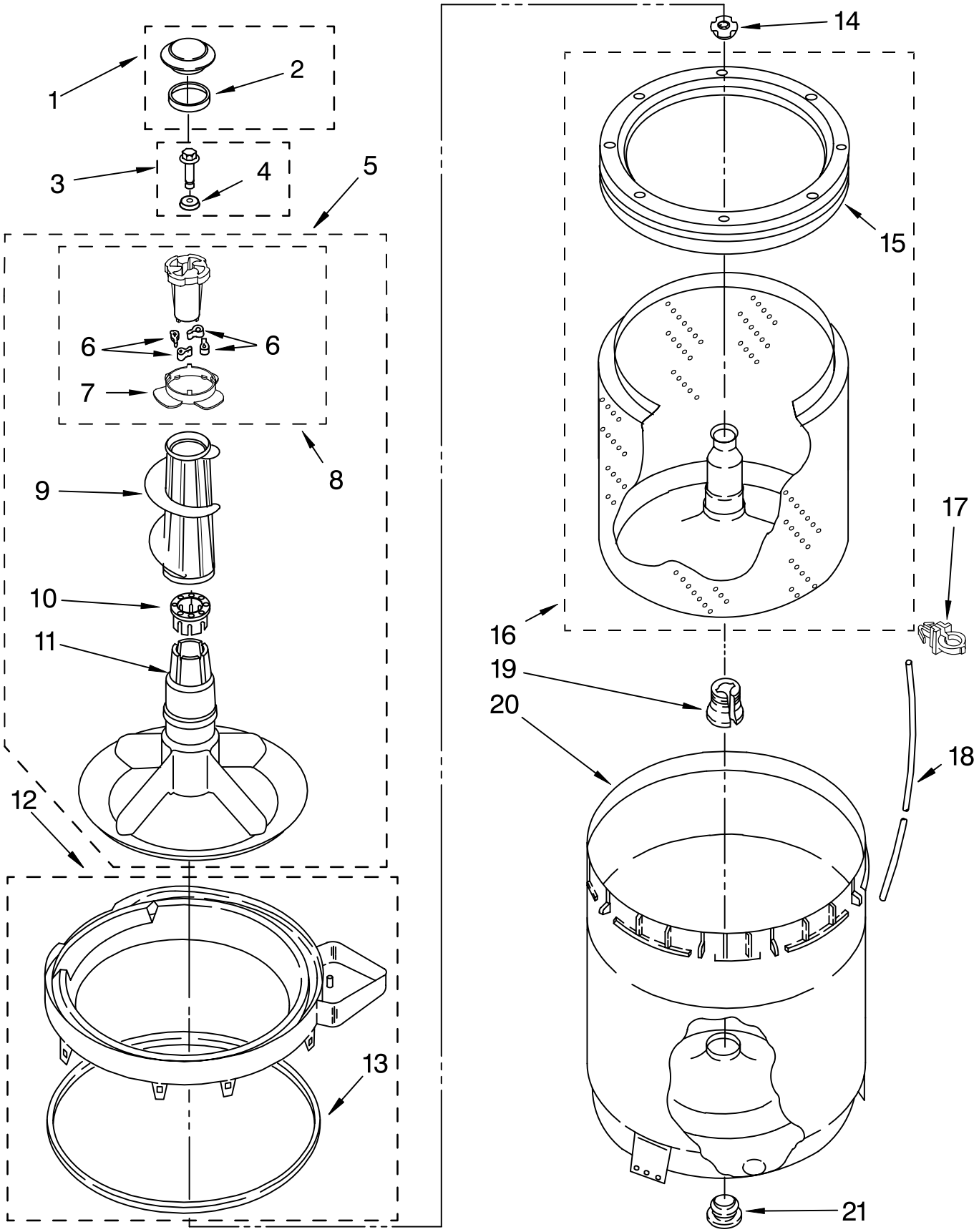

AGITATOR, BASKET AND TUB PARTS

For Model: 110.29442801
(White)

Illus. No.	Part No.	DESCRIPTION
1	63973	Cap, Agitator
2	358912	Seal, Agitator Cap
3	358237	Screw & Washer (5/16−24 X 1)
4	3949550	Washer
5	3347674	Agitator, Assembly (Complete)
6	3366877	Dog, Agitator Clutch (4)
7	3363661	Bearing, Cam Driven
8	3363662	Cam, Driven
9	389141	Auger, Agitator
10	3350389	Spacer−Thrust
11	389386	Agitator
12	8528150	Tub Ring & Gasket
13	3976308	Gasket, Tub Ring
14	21366	Nut, Spanner
15	387240	Balance Ring
16	8526016	Basket & Balance Ring
17	2219077	Clip, Pressure Switch Hose
18	3347780	Hose, Pressure
19	389140	Block, Basket Drive
20	63849	Tub
21	383727	Gasket, Centerpost

BRAKE, CLUTCH, GEARCASE, MOTOR AND PUMP PARTS

For Model: 110.29442801
(White)

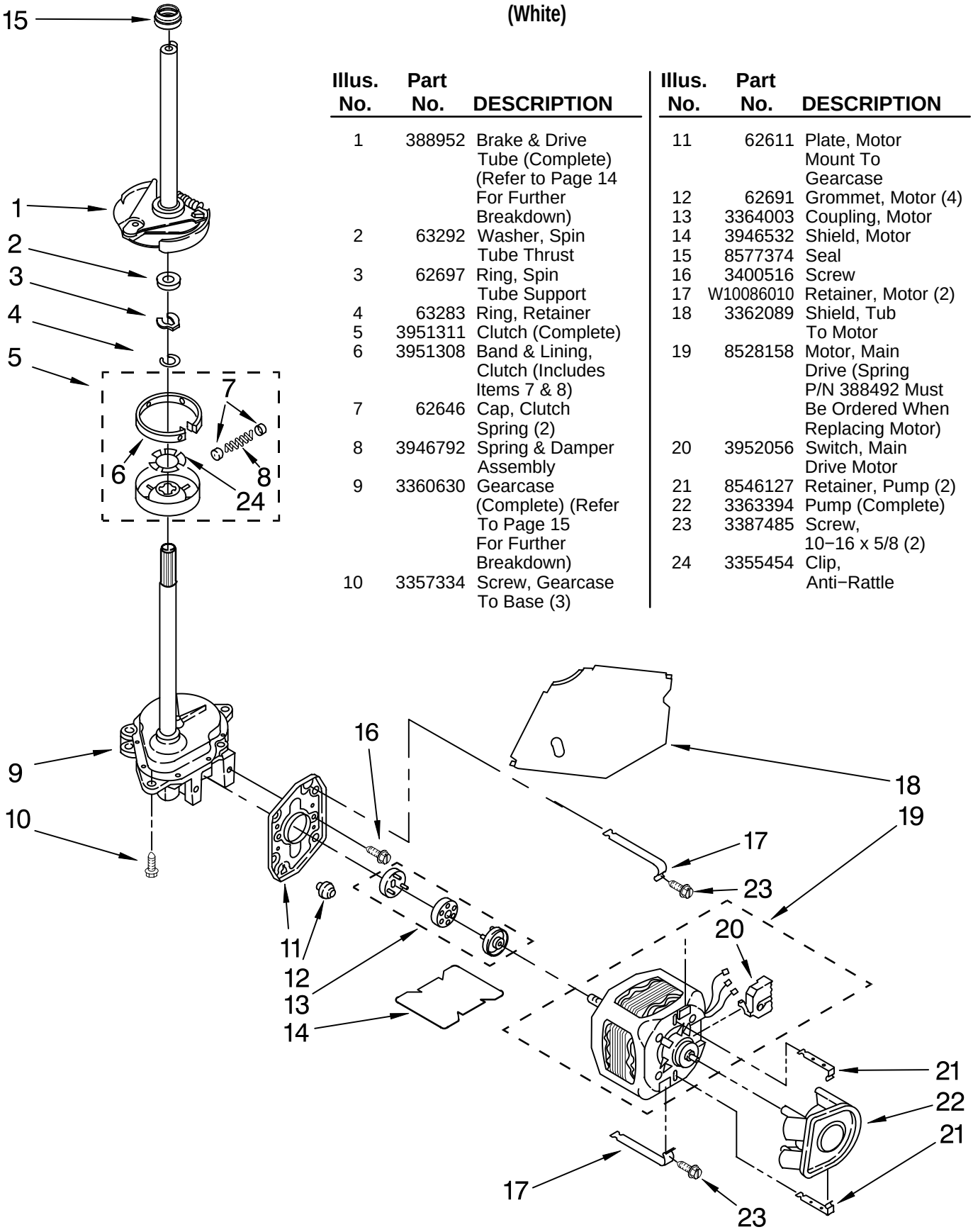

Illus. No.	Part No.	DESCRIPTION
1	388952	Brake & Drive Tube (Complete) (Refer to Page 14 For Further Breakdown)
2	63292	Washer, Spin Tube Thrust
3	62697	Ring, Spin Tube Support
4	63283	Ring, Retainer
5	3951311	Clutch (Complete)
6	3951308	Band & Lining, Clutch (Includes Items 7 & 8)
7	62646	Cap, Clutch Spring (2)
8	3946792	Spring & Damper Assembly
9	3360630	Gearcase (Complete) (Refer To Page 15 For Further Breakdown)
10	3357334	Screw, Gearcase To Base (3)
11	62611	Plate, Motor Mount To Gearcase
12	62691	Grommet, Motor (4)
13	3364003	Coupling, Motor
14	3946532	Shield, Motor
15	8577374	Seal
16	3400516	Screw
17	W10086010	Retainer, Motor (2)
18	3362089	Shield, Tub To Motor
19	8528158	Motor, Main Drive (Spring P/N 388492 Must Be Ordered When Replacing Motor)
20	3952056	Switch, Main Drive Motor
21	8546127	Retainer, Pump (2)
22	3363394	Pump (Complete)
23	3387485	Screw, 10−16 x 5/8 (2)
24	3355454	Clip, Anti−Rattle

MACHINE BASE PARTS

For Model: 110.29442801
(White)

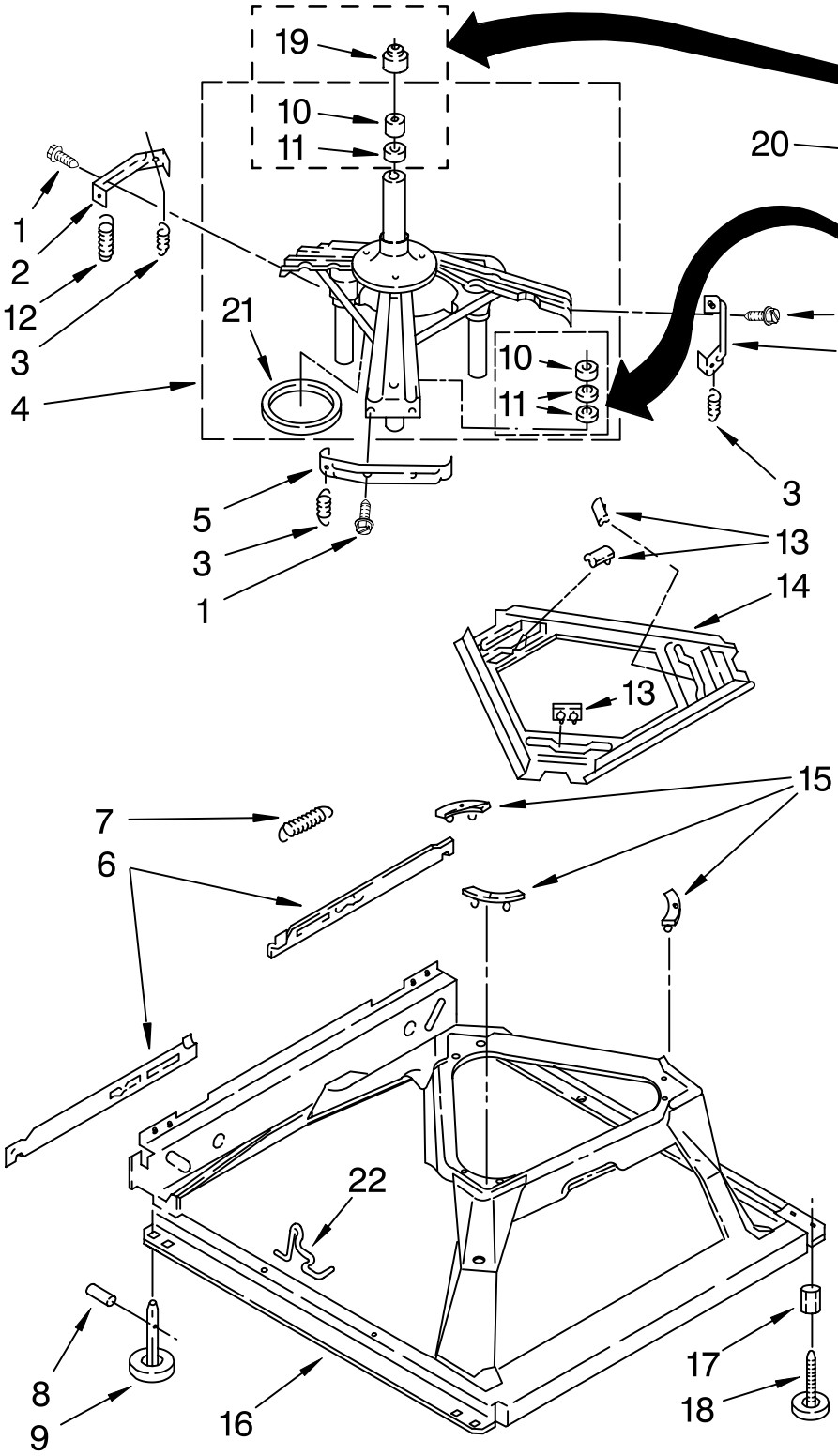

Illus. No.	Part No.	DESCRIPTION
1	3400076	Screw, Bracket Mounting (10−32 x 5/8)
2	64067	Bracket, Spring Outer (2)
3	63907	Spring, Suspension (3)
4	8575214	Support & Brake, Tub
5	64065	Bracket, Spring Outer (L.F.)
6	63466	Link, Leveling Mechanism (2)
7	62597	Spring, Leveling Mechanism
8	62837	Pin, Knurled
9	62596	Foot, Rear (2)
10	8546455	Bearing, Centerpost (2)
11	357409	Seal, Centerpost (3)
12	8534035	Spring, Counterweight (Must Be Ordered When Replacing Drive Motor)
13	62568	Pad, Plate
14	3946509	Plate, Suspension (Includes Item 13)
15	3363660	Pad, Base
16	3946512	Base Assembly (Includes Items 6, 7, 8, 9, 13, 14, 15 & 22)
17	3359452	Nut, 3/8−16 (2)
18	W10001130	Foot, Front (2)
19	8577376	Seal, Centerpost
20	285203	Centerpost Bearing Kit (Includes Items 10, 11 & 19)
21	63134	Ring, Sound Deadening
22	W10145155	Retainer, Suspension Spring (3)

WIRING HARNESS PARTS

For Model: 110.29442801
(White)

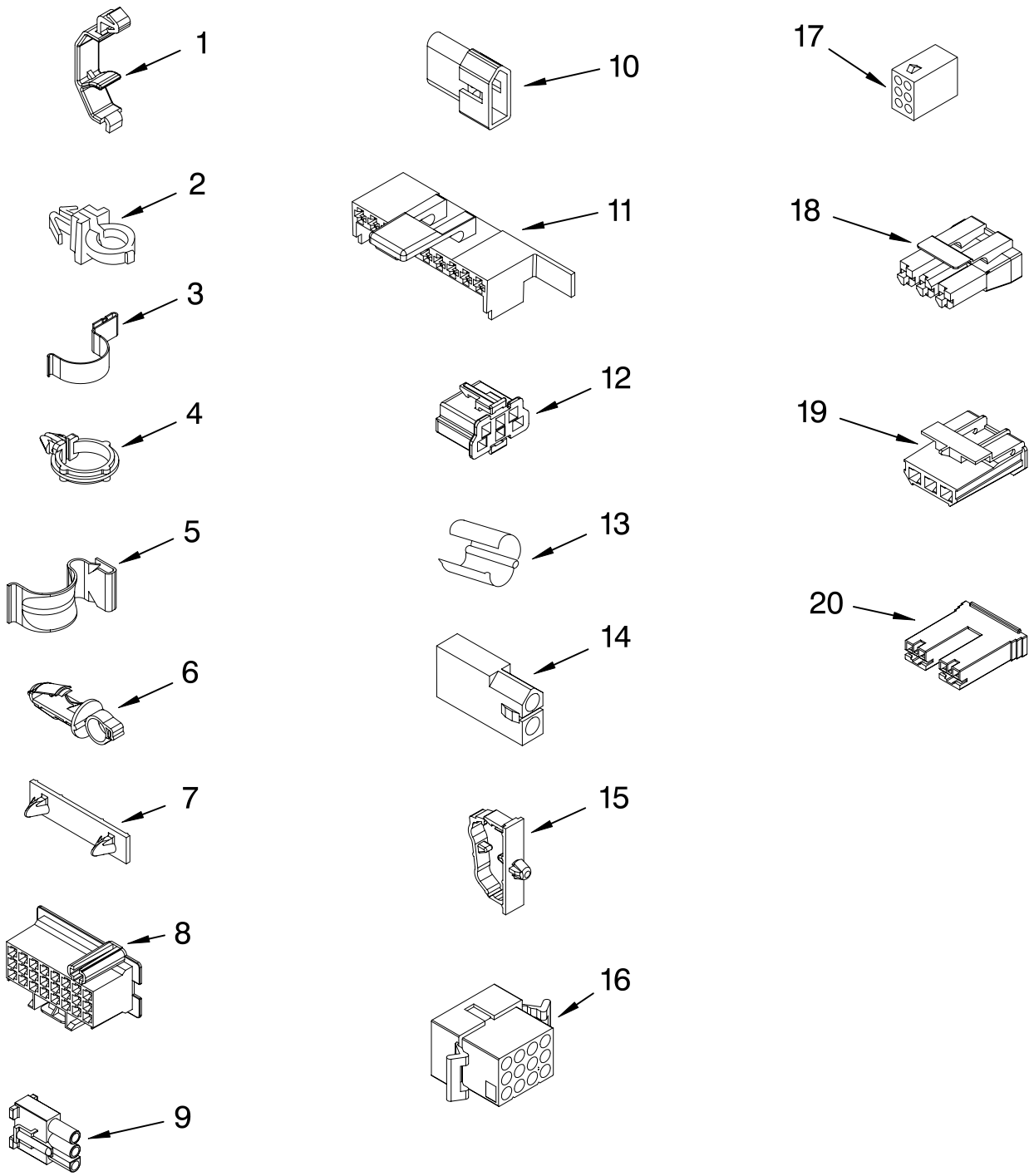

WH2J

FOR ORDERING INFORMATION REFER TO PARTS PRICE LIST

WIRING HARNESS PARTS

For Model: 110.29442801
(White)

Illus. No.	Part No.	DESCRIPTION
1	3349557	Retainer, Harness
2	388498	Clip, Harness
3	3347812	Clip, Harness
4	3352501	Clip, Harness (Push−In)
5	90016	Clip, Harness (Half−Harness)
6	3390496	Clip, Harness
7	389379	Retainer, Harness
8		Timer, Block Disconnect
	3948614	Natural
	352089	Black
9	62889	Receptacle, Terminal (3−Way)
10	353424	Plug, Terminal (3−Way)
11	62505	Block, Disconnect (Motor 2 Speed)
12	3347243	Block, Disconnect
13	63523	Protector
14	717252	Connector (2−Way)
15	3352944	Clip, Harness
16	3390423	Block, Disconnect (12−Way)
17	3347730	Receptacle (6−Way)
18	3948617	Connector (T.P.A.) (3−Circuit)
19	3360056	Plug (T.P.A) (3−Circuit) (Pressure Switch)
20		Block, Connector
	3354925	Natural
	3354926	Red

FOR COMPLETE WIRING HARNESS REFER TO CONTROL AND REAR PANEL PARTS PAGE

WH2J

BRAKE AND DRIVE TUBE PARTS

For Model: 110.29442801
(White)

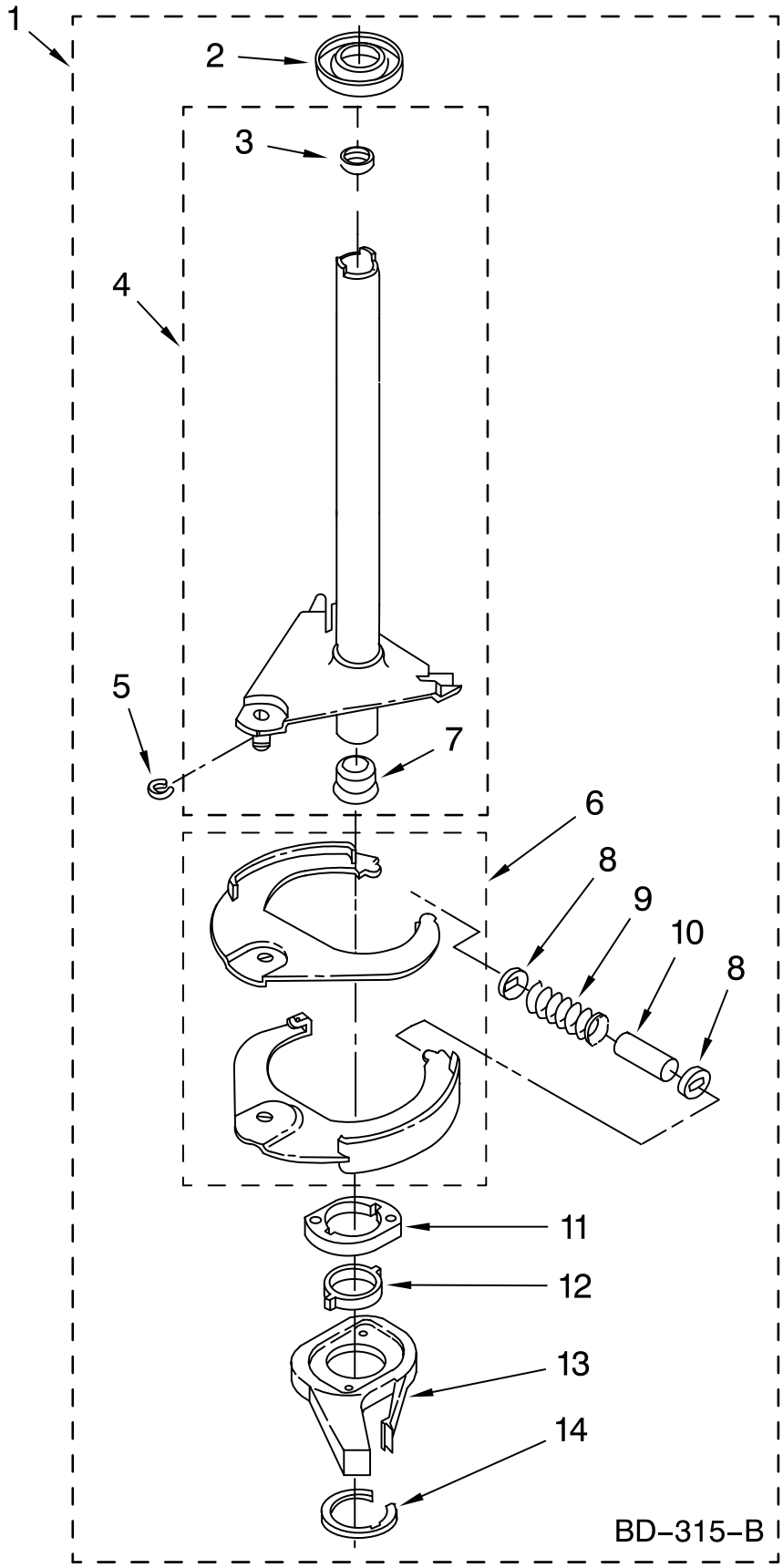

Illus. No.	Part No.	DESCRIPTION
1	388952	Brake And Drive Tube (Complete)
2	62658	Ring, Thrust
3	356427	Seal, Drive Tube
4	64027	Tube, Basket Drive (Includes Illus. 3, 4, 5 & 9)
5	64035	Ring, Retaining
6	64232	Shoe, Brake (2)
7	62703	"T" Bearing, Spin Tube
8	3353956	Cap, Brake Spring (2)
9	387806	Spring, Brake
10	3355360	Sleeve, Brake Spring
11	661516	Cam, Brake Release
12	63022	Sleeve, Cam
13	64194	Driver, Brake Cam
14	90368	Ring, Retaining

FOLLOWING PARTS NOT ILLUSTRATED

	285208	Lubricant (Use Only In Brake Shoe Assembly On Roller & Pin)

FOR ORDERING INFORMATION REFER TO PARTS PRICE LIST

GEARCASE PARTS

For Model: 110.29442801
(White)

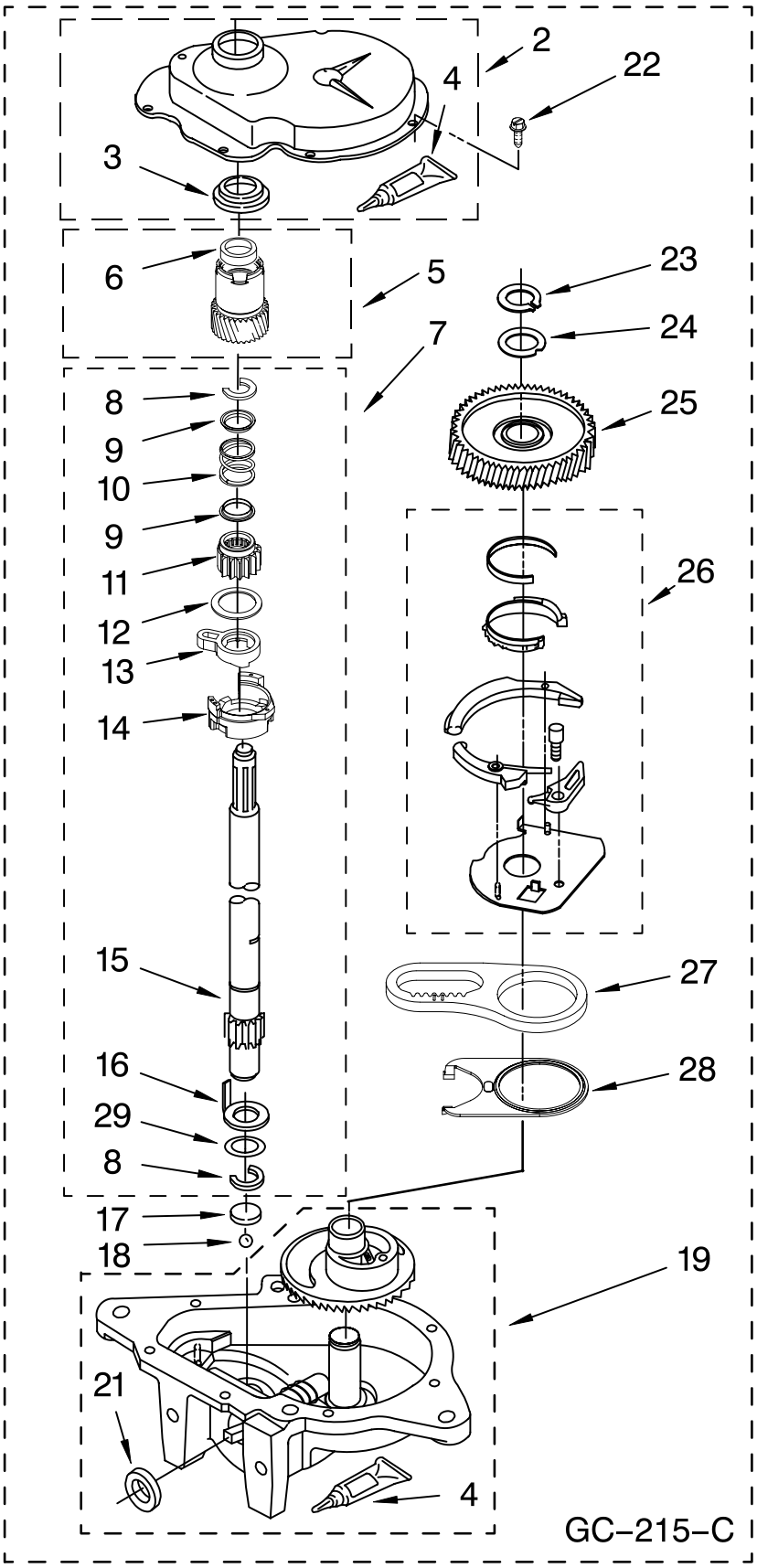

Illus. No.	Part No.	DESCRIPTION
1	3360630	Gearcase (Complete)
2	285202	Cover, Gearcase
3	3349985	Seal, Gearcase Cover
4	285195	Sealer, Gasket (.20 Fl. Oz.) (6 ml)
5	63320	Pinion, Spin (Includes Illus. 25)
6	356427	Seal, Spin Pinion
7	389387	Shaft, Agitator (Complete)
8	90369	Ring, Retaining (2)
9	62677	Retainer, Spring
10	62676	Spring, Agitate
11	63273	Gear, Agitate (Includes 15 and 29)
12	62619	Washer, Agitate Gear
13	62580	Cam Follower (Includes 14)
14	62581	Cam, Agitate (Includes 13)
15	285509	Shaft, Agitator (Includes 11 and 29)
16	62618	Washer, Cam Thrust
17	16018	Bearing, Thrust
18	85529	Ball, Bearing
19	389230	Bottom and Pinion, Gearcase
21	285352	Seal, Thrust Plug
22	3351614	Screw, Gearcase Cover, Mounting (8) (10−24 x 3/8)
23	3362552	Ring, Retaining
24	285735	Washer Kit, Thrust
25	62570	Gear, Spin
26	388253	Neutral Assembly
27	3349296	Rack, Connecting
28	62621	Actuator, Shift
29	388815	Washer, Intermediate

FOR ORDERING INFORMATION REFER TO PARTS PRICE LIST

OPTIONAL PARTS (NOT INCLUDED)

For Model: 110.29442801
(White)

Illus. No.	Part No.	DESCRIPTION
		PAINT, TOUCH−UP (1/2oz.)
	72017	White
		PAINT, PRESSURIZED SPRAY (12 oz.)
	350938	Primer, Gray
	350930	White
		PAINT, BULK (1 qt.)
	799344	White (Uncut)

Illus. No.	Part No.	DESCRIPTION
		OIL
	350572	Oil, Gearcase (16 Oz.)
		LUBRICANT
	285208	Lubricant (Use Only in Brake Shoe Assembly On Roller and Pin)
		SEALER
	285195	Sealer, Gasket (.20 Fl. Oz.) (6 ml)

Illus. No.	Part No.	DESCRIPTION
		ACCESSORY PARTS
	367031	Drain Protector
	280129	Siphon Break Kit
	280130	Drain Hose Adapter Kit
	280131	Drain Hose Extension Kit
	8212546RP	Inlet Hoses, 4 Ft. (Two Black Hoses W/Straight Ends & 4 Rubber Washers)
	8212641RP	Inlet Hoses, 5 Ft. (Two Black Hoses W/Straight Ends & 4 Rubber Washers)
	8212656RP	Inlet Hoses, 10 Ft (Two Black Hoses W/Straight Ends & 4 Rubber Washers)
	8212545RP	Inlet Hoses, 5 Ft. (One Red Hose & One Blue Hose W/Straight Ends & 4 Rubber Washers)
	8212487RP	Inlet Hoses, 5 Ft. (Two Braided Hoses W/Straight Ends & 4 Rubber Washers)
	8212637RP	Inlet Hoses, 6 Ft. (Two Black Hoses W/One Straight End & One 90 Degree End & 4 Rubber Washers
	8212638RP	Inlet Hoses, 6 Ft. (Two Braided Hoses W/One Straight End & One 90 Degree End & 4 Rubber Washers
	285448A	Hose Washers (Package Of 4)
	285452A	Hose Screen (Package Of 2)