TOP AND CABINET PARTS

For Model: NTW4501XQ0
(White)

AUTOMATIC WASHER

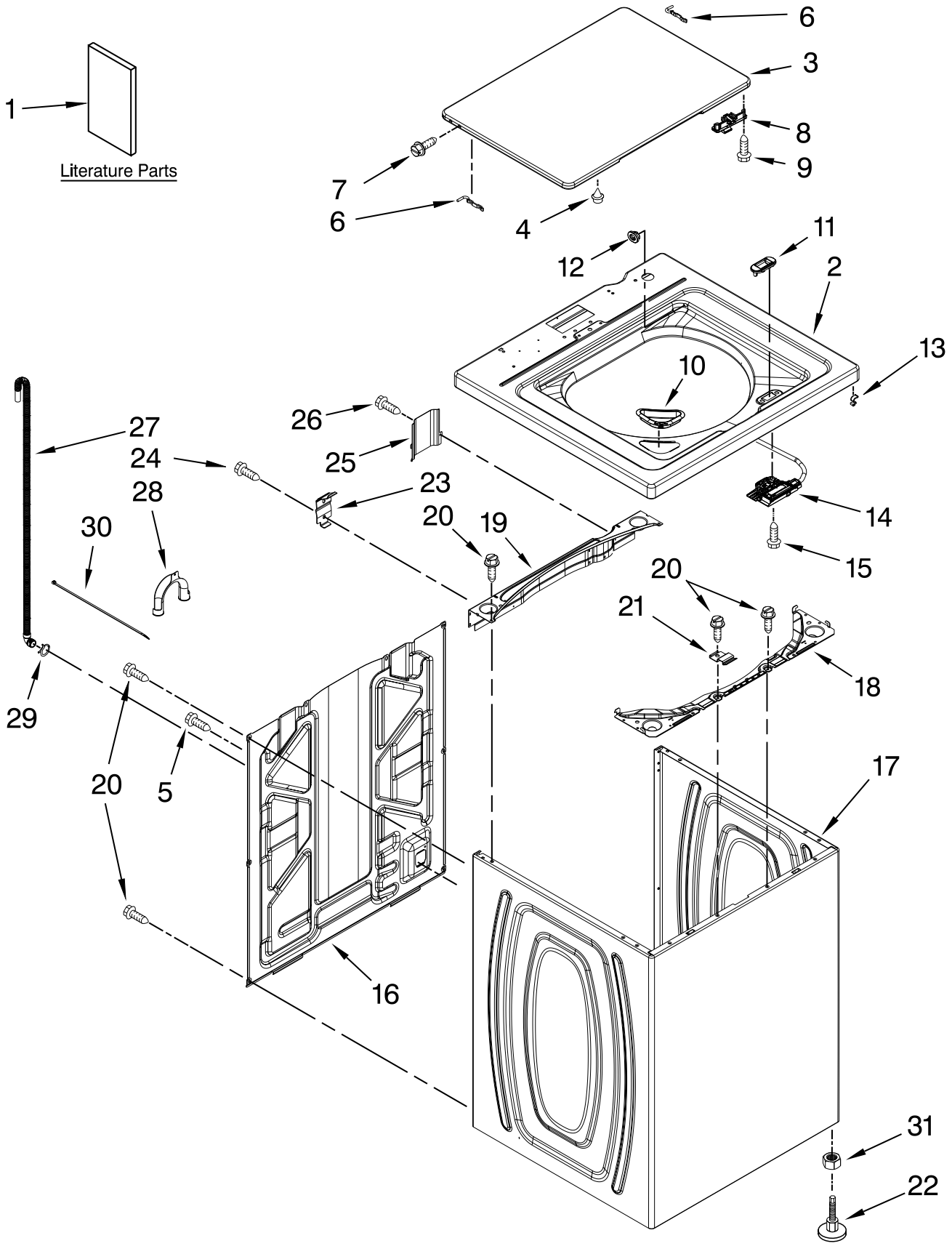

FOR ORDERING INFORMATION REFER TO PARTS PRICE LIST

TOP AND CABINET PARTS

For Model: NTW4501XQ0
(White)

Illus. No.	Part No.	DESCRIPTION
1		Literature Parts
	W10240509	Installation Instructions
	W10420400	Use & Care Guide
	W10280489	Tech Sheet
	W10062972	Energy Guide
2	W10251299	Top
3	W10338625	Lid (Includes Item 4)
4	9724509	Bumper, Lid
5	9740848	Screw, 8−18 x 1/2
6	91770	Hinge, Lid
7	W10119872	Screw, Lid Hinge
8	W10240513	Strike, Lid Lock
9	W10273971	Screw, 6−19 x 1/2
10	W10192089	Dispenser, Bleach
11	W10392041	Bezel, Lid Lock
12	21258	Bearing, Lid Hinge
13	90016	Clip, Lid Lock Harness
14	W10238287	Latch, Lid Lock Assembly
15	8281163	Screw, 8−16 x 1/2
16	W10250884	Panel, Rear
17	W10251994	Cabinet (Includes Items 18, 19, 20 & 22)
18	W10215098	Brace, Cabinet Top Front
19	W10215099	Brace, Cabinet Top Rear
20	1157158	Screw, 8−18 x 3/8
21	W10248088	Lock, Top
22	W10335586	Foot Assembly, Leveling
23	W10215102	Hinge, Top
24	W10142728	Screw, 8−32 x 3/8
25	W10215139	Cover, Harness
26	3400076	Screw, 10−23 x 5/8
27	W10221546	Hose, Outer Drain Assembly (Includes Items 28 & 29)
28	W10280024	U−Bend, Drain Hose
29	356138	Clamp, Hose
30	W10339879	Cable Tie
31	3359452	Nut, Locking

CONTROLS AND WATER INLET PARTS

For Model: NTW4501XQ0
(White)

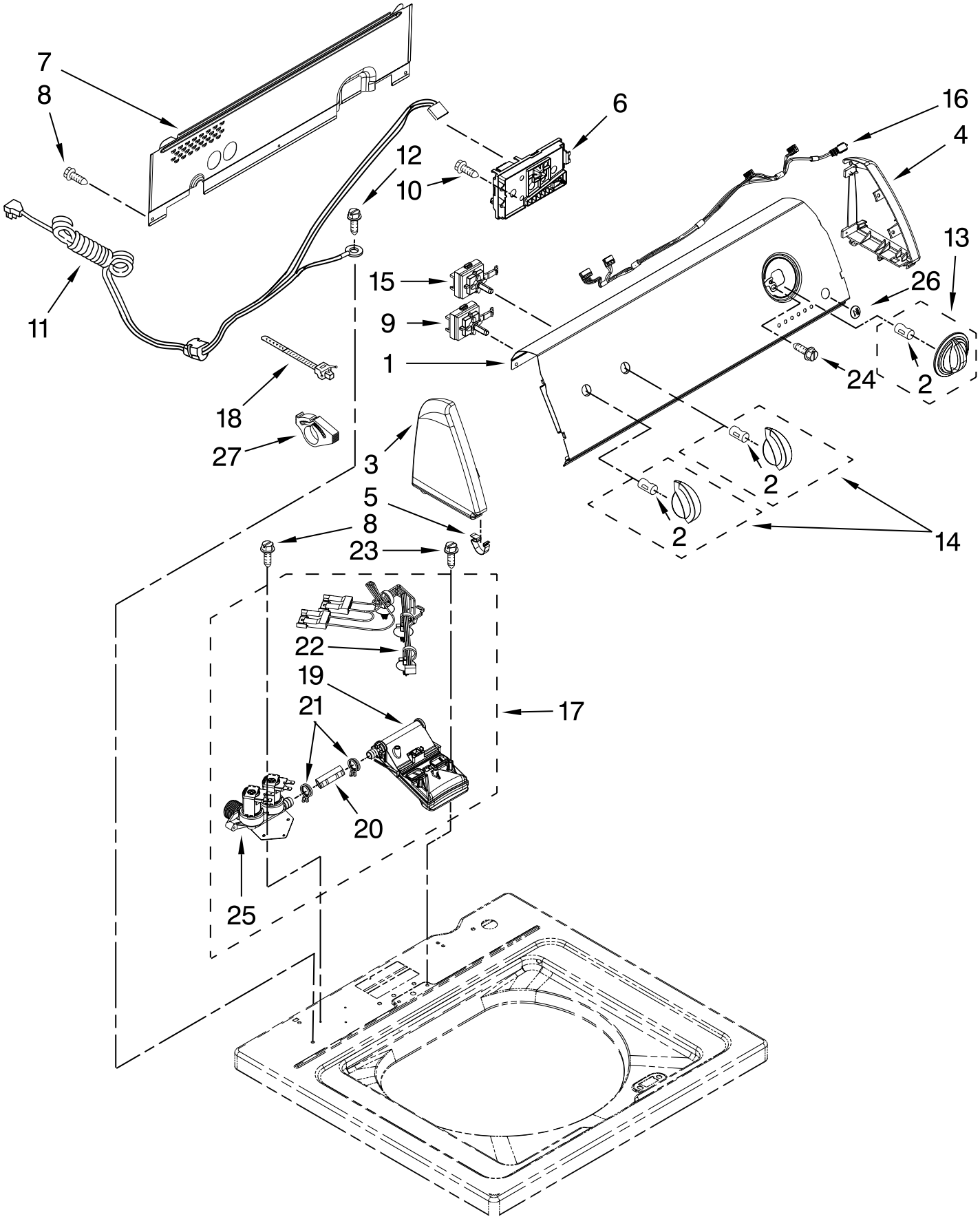

FOR ORDERING INFORMATION REFER TO PARTS PRICE LIST

CONTROLS AND WATER INLET PARTS

For Model: NTW4501XQ0
(White)

Illus. No.	Part No.	DESCRIPTION
1	W10420385	Panel, Console
2	8536939	Clip, Knob
3	W10316303	Cap, End (L.H.) (Includes Item 5)
4	W10316302	Cap, End (R.H.) (Includes Item 5)
5	8312709	Clip, Console
6	W10442493	Control Unit Assembly, Machine & Motor
7	W10420985	Panel, Console Rear Cover
8	1157158	Screw, 8−18 x 3/8
9	W10268910	Switch, Rotary Encoder
10	90767	Screw, 8−18 x 3/8
11	W10276649	Cord, Power
12	3400076	Screw, Power Cord Ground
13	W10196507	Knob, Timer
14	W10196503	Knob, Control
15	W10285517	Switch, Rotary Encoder
16	W10291178	Harness, Upper
17	W10432353	Inlet Assembly, Water
18	W10339879	Cable Tie
19	W10441423	Vacuum Break
20	W10238347	Hose, Vacuum Break
21	W10117298	Clamp, Hose
22	W10344775	Harness, Valve
23	8281163	Screw, 8−16 x 1/2
24	3400818	Screw, 8−18 x.20
25	W10356257	Valve, Water Mixing
26	W10272474	Pushbutton, Start
27	W10348582	Clamp

BASKET AND TUB PARTS

For Model: NTW4501XQ0
(White)

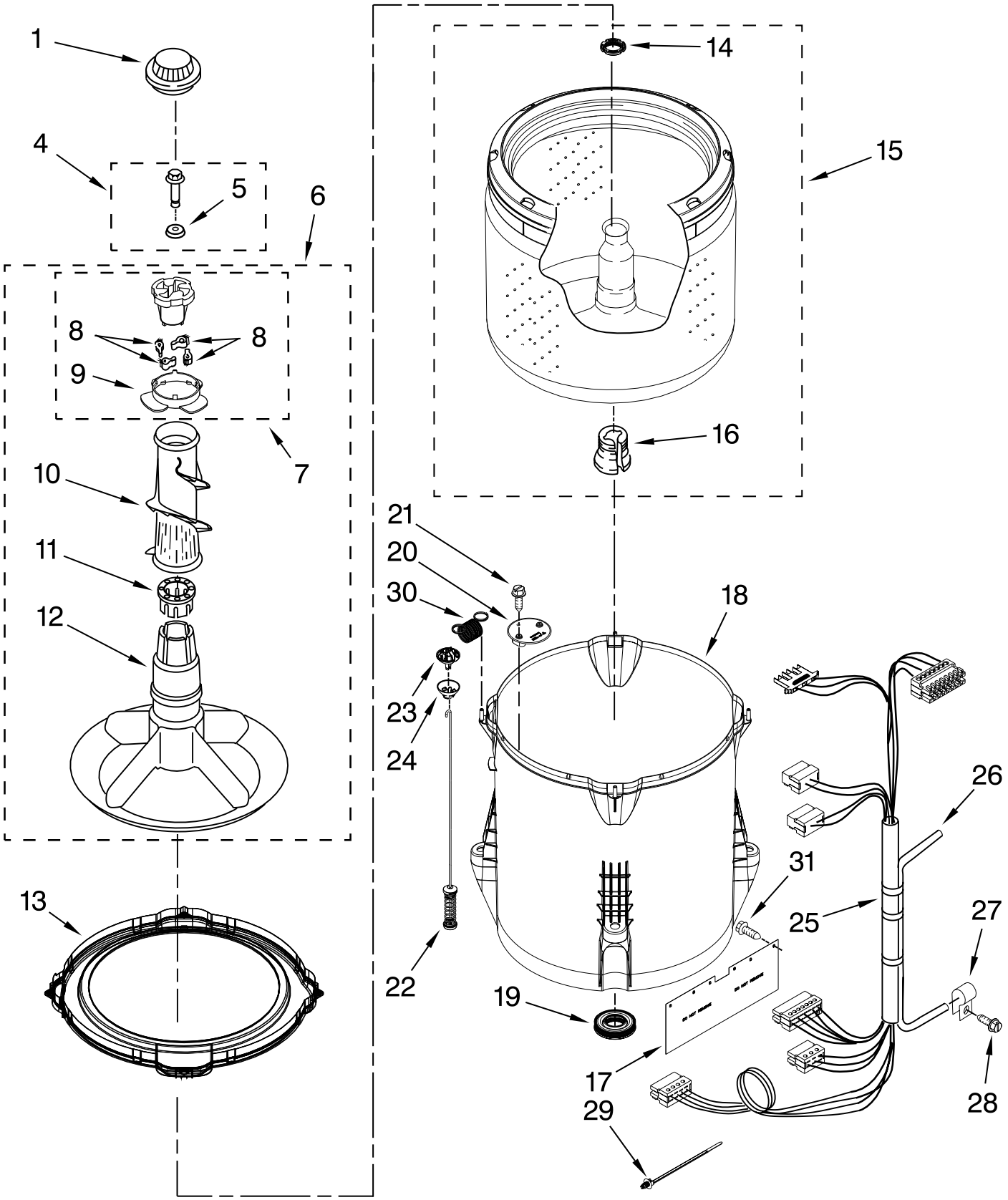

FOR ORDERING INFORMATION REFER TO PARTS PRICE LIST

BASKET AND TUB PARTS

For Model: NTW4501XQ0
(White)

Illus. No.	Part No.	DESCRIPTION
1	3355758	Cap, Agitator
4	W10003790	Screw & Washer Assembly
5	3949550	Washer
6	3348117	Agitator, Complete Assembly
7	3363663	Cam, Driven
8	3366877	Dog, Agitator Clutch
9	3363661	Bearing, Cam
10	3348752	Clothes Mover
11	3350389	Spacer, Thrust
12	3347288	Agitator
13	W10215108	Ring, Tub
14	21366	Nut, Spanner
15	W10389330	Basket Assembly
16	389140	Block, Basket Drive
17	W10339098	Shield, Splash
18	W10238320	Tub (Includes Item 19)
19	W10006371	Seal, Tub
20	W10215093	Filter, Drain Pump
21	8533928	Screw, 8−18 x 3/4
22	W10257088	Damper Assembly, Tub Suspension (Set Of 4−Includes Items 23 & 24)
23	W10215136	Ball, Suspension (Set Of 4 − Includes Item 24)
24	W10256551	Bushing, Suspension (Set Of 4 − Includes Item 23)
25	W10297444	Harness, Lower (Includes Items 26 & 29)
26	W10297441	Hose, Pressure Switch
27	W10005430	Clamp, Pressure Hose Retainer
28	8533943	Screw, 10−16 x 3/4
29	W10298887	Cable Tie
30	W10348658	Spring, Tub Centering
31	W10273613	Retainer, Push In

GEARCASE, MOTOR AND PUMP PARTS

For Model: NTW4501XQ0
(White)

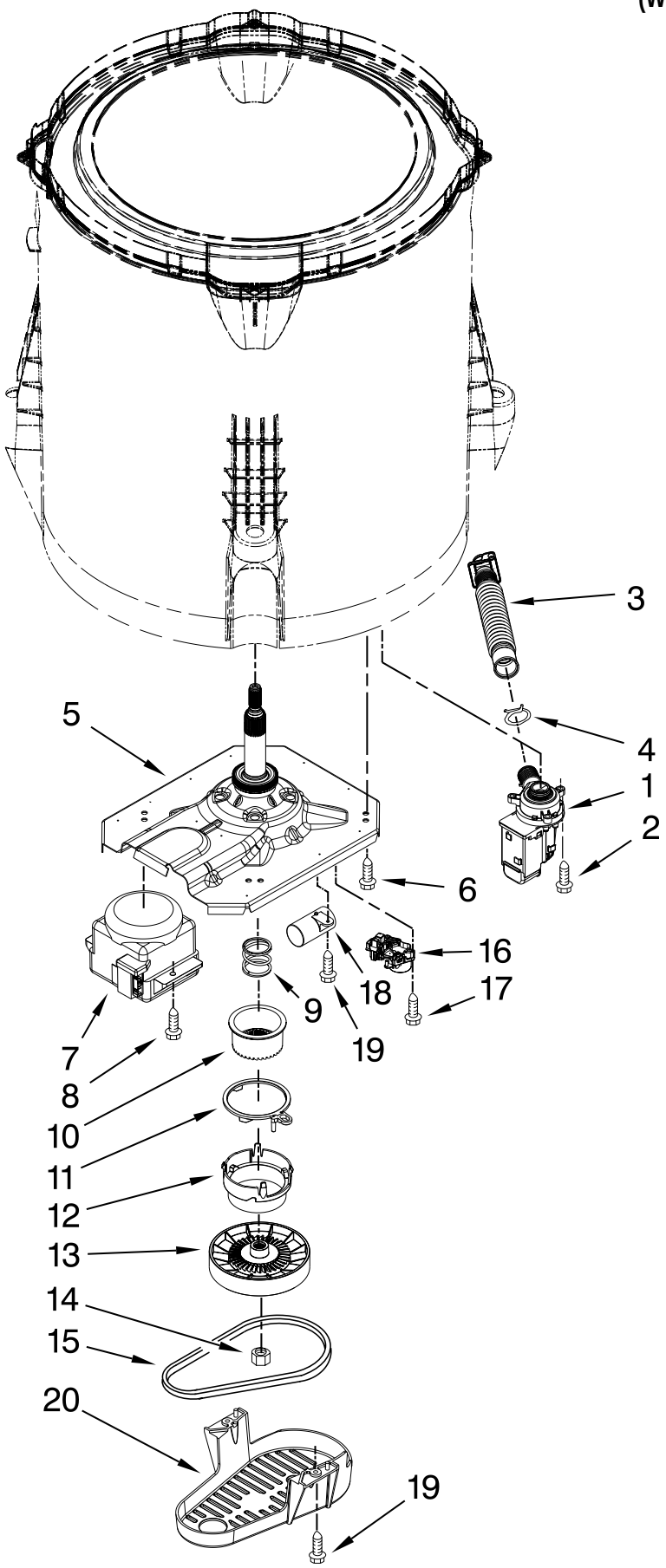

Illus. No.	Part No.	DESCRIPTION
1	W10276397	Pump Assembly, Drain
2	W10004910	Screw, 12−16 x 1.25
3	W10215091	Hose, Inner Drain Assembly
4	8317496	Clamp, Hose
5	W10006378	Gearcase Assembly
6	W10249633	Screw, 7.2−1.6 x 30
7	W10006415	Motor, Drive
8	W10094780	Screw, M8−1.25 x 20
9	W10006382	Spring, Splutch (Includes Items 10, 11, 12 & 13)
10	W10006352	Slider, Splutch (Includes Items 9, 11, 12 & 13)
11	W10006353	Cam Ring, Splutch (Includes Items 9, 10, 12 & 13)
12	W10006354	Cam, Splutch (Includes Items 9, 10, 11 & 13)
13	W10006356	Pulley
14	W10163336	Nut, Pulley
15	W10006384	Belt, Drive
16	W10006355	Actuator, Shift
17	9741052	Screw, 6−32 x 1.00
18	W10278556	Capacitor, Motor Run
19	357640	Screw, 10−16 x 5/8
20	W10006383	Shield, Pulley Cover

FOR ORDERING INFORMATION REFER TO PARTS PRICE LIST

OPTIONAL PARTS (NOT INCLUDED)

For Model: NTW4501XQ0
(White)

Illus. No.	Part No.	DESCRIPTION
PAINT, TOUCH−UP (1/2oz.)		
	72017	White
PAINT, PRESSURIZED SPRAY (12 oz.)		
	350938	Primer, Gray
	350930	White
PAINT, BULK (1 qt.)		
	799344	White (Uncut)

Illus. No.	Part No.	DESCRIPTION
WATER SYSTEM PARTS		
	DRNEXT4	Drain Hose Extension Kit
	285834	Siphon Break Kit
	367031	Drain Protector
	3363920	Adapter, Standpipe 2" Diameter to 1" Diameter
SEALER		
	285195	Sealer, Gasket (.20 Fl. Oz.) (6 ml)
COUPLING		
	384496	Coupling, Hose

Illus. No.	Part No.	DESCRIPTION
ACCESSORY PARTS		
	8212526	Washer Drip Tray
	W10355010	All Purpose Appliance Cleaner
	8212546RP	Inlet Hoses, 4 Ft. (Two Black Hoses W/Straight Ends & 4 Rubber Washers)
	8212641RP	Inlet Hoses, 5 Ft. (Two Black Hoses W/Straight Ends & 4 Rubber Washers)
	8212545RP	Inlet Hoses, 5 Ft. (One Red Hose & One Blue Hose W/Straight Ends & 4 Rubber Washers)
	8212487RP	Inlet Hoses, 5 Ft. (Two Braided Hoses W/Straight Ends & 4 Rubber Washers)
	8212637RP	Inlet Hoses, 6 Ft. (Two Black Hoses W/ One Straight End & One 90 Degree End & 4 Rubber Washers)
	8212638RP	Inlet Hoses, 6 Ft. (Two Braided Hoses W/ One Straight End & One 90 Degree End & 4 Rubber Washers)
	8212656RP	Inlet Hoses, 10 Ft (Two Black Hoses W/ Straight Ends & 4 Rubber Washers)
	285448A	Hose Washers (Package of 4)
	285452A	Hose Screen (Package of 2)
	W10135699	Affresh Odor Remover