TOP AND CABINET PARTS

For Model: 7MWTW1808AW0

(White)

AUTOMATIC WASHER

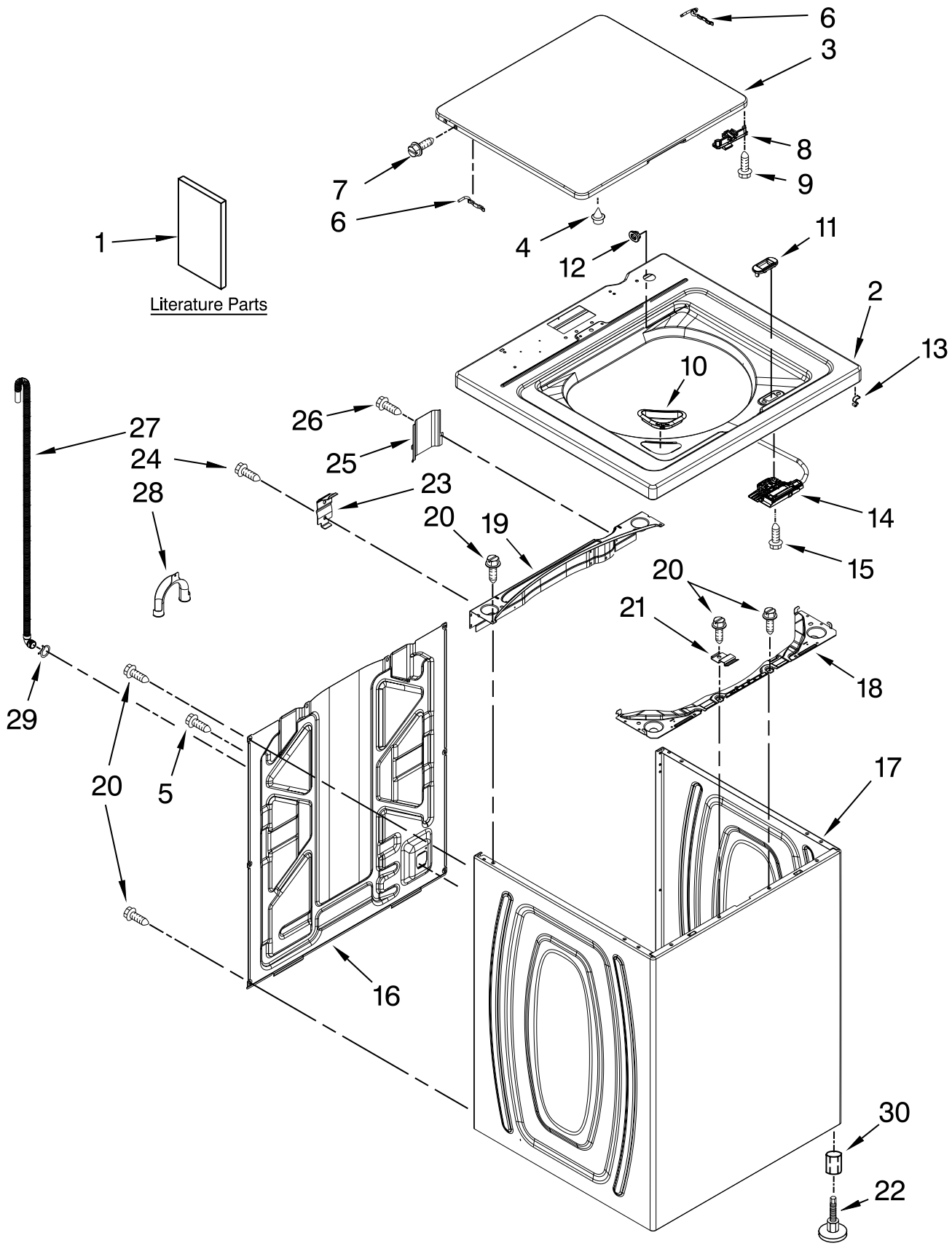

FOR ORDERING INFORMATION REFER TO PARTS PRICE LIST

TOP AND CABINET PARTS

For Model: 7MWTW1808AW0
(White)

Illus. No.	Part No.	DESCRIPTION
1		Literature Parts
	W10478095	Installation Instructions
	W10509249	Use & Care Guide
	W10468340	Tech Sheet
	W10509246	Energy Guide
2	W10251319	Top
3	W10027624	Lid (Includes Item 4)
4	9724509	Bumper, Lid
5	9740848	Screw
6	91770	Hinge, Lid
7	W10119872	Screw
8	W10240513	Strike, Lid Lock
9	W10273971	Screw
10	W10192089	Dispenser, Bleach
11	W10392041	Bezel, Lid Lock
12	21258	Bearing, Lid Hinge
13	90016	Clip, Lid Lock Harness
14	W10238287	Latch, Lid Lock Assembly
15	8281163	Screw
16	W10250884	Panel, Rear
17	W10251994	Cabinet (Includes Items 18, 19, 20 & 22)
18	W10215098	Brace, Cabinet Top Front
19	W10215099	Brace, Cabinet Top Rear
20	1157158	Screw
21	W10248088	Lock, Top
22	W10397767	Foot Assembly, Leveling
23	W10215102	Hinge, Top
24	W10142728	Screw
25	W10215139	Cover, Harness
26	3400076	Screw
27	W10221546	Hose, Outer Drain Assembly (Includes Items 28 & 29)
28	W10280024	U−Bend, Drain Hose
29	356138	Clamp, Hose
30	3359452	Nut, Locking

CONTROLS AND WATER INLET PARTS

For Model: 7MWTW1808AW0

(White)

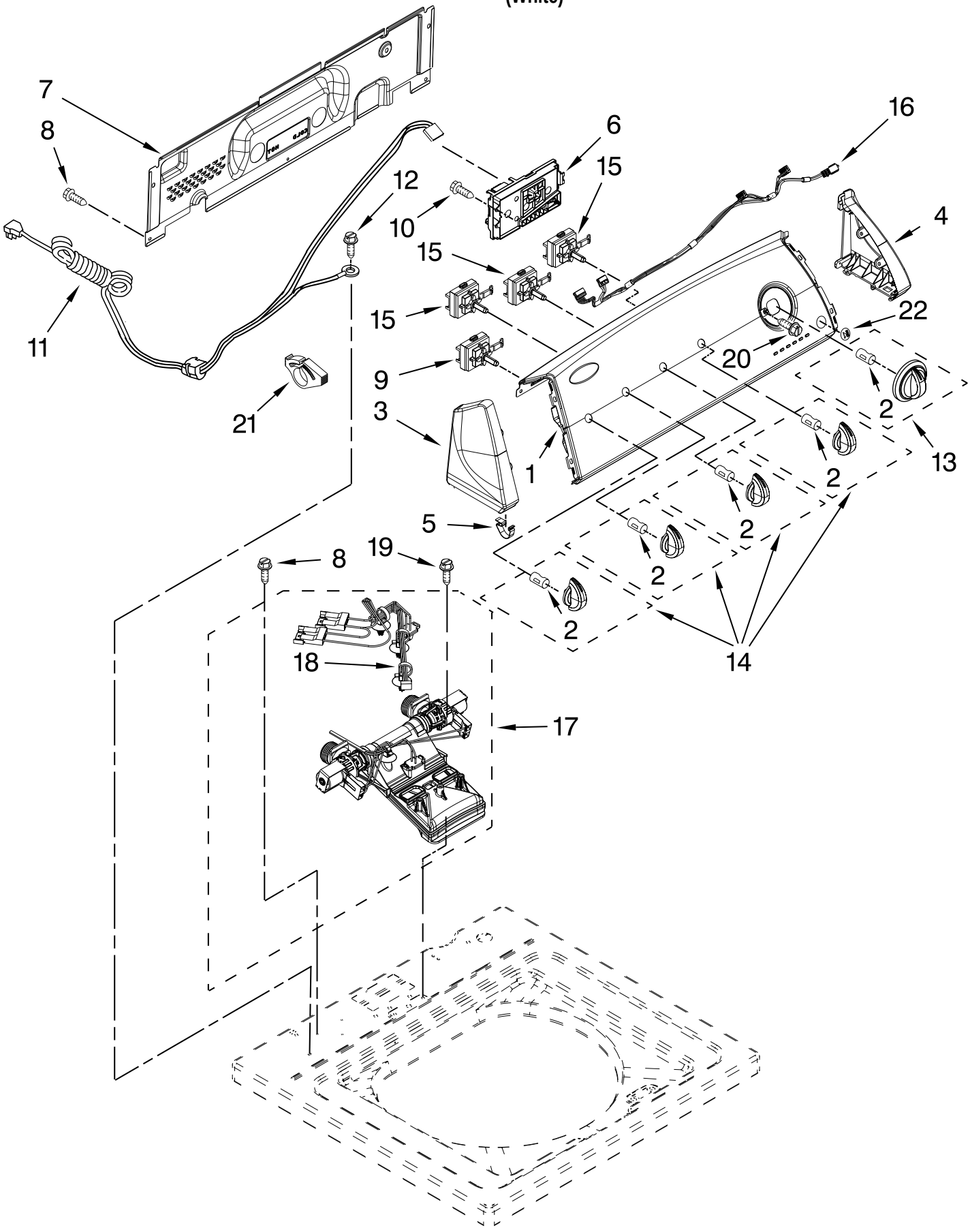

FOR ORDERING INFORMATION REFER TO PARTS PRICE LIST

CONTROLS AND WATER INLET PARTS

For Model: 7MWTW1808AW0

(White)

Illus. No.	Part No.	DESCRIPTION
1	W10502612	Panel, Console
2	8536939	Clip, Knob
3	8566035	Cap, End (L.H.) (Includes Item 5)
4	8566032	Cap, End (R.H.) (Includes Item 5)
5	8312709	Clip, Console
6	W10511903	Control Unit Assembly, Machine & Motor
7	W10461159	Panel, Console Rear Cover
8	1157158	Screw
9	W10285512	Switch, Temperature
10	90767	Screw
11	W10276649	Cord, Power
12	3400076	Screw
13	W10034750	Knob, Timer
14	W10034380	Knob, Control
15	W10285511	Switch, Rotary Encoder
16	W10291176	Harness, Upper
17	W10472844	Inlet Assembly, Water
18	W10423127	Harness, Valve
19	8281163	Screw
20	3400818	Screw
21	W10339879	Cable Tie
22	W10251309	Pushbutton, Start

BASKET AND TUB PARTS

For Model: 7MWTW1808AW0

(White)

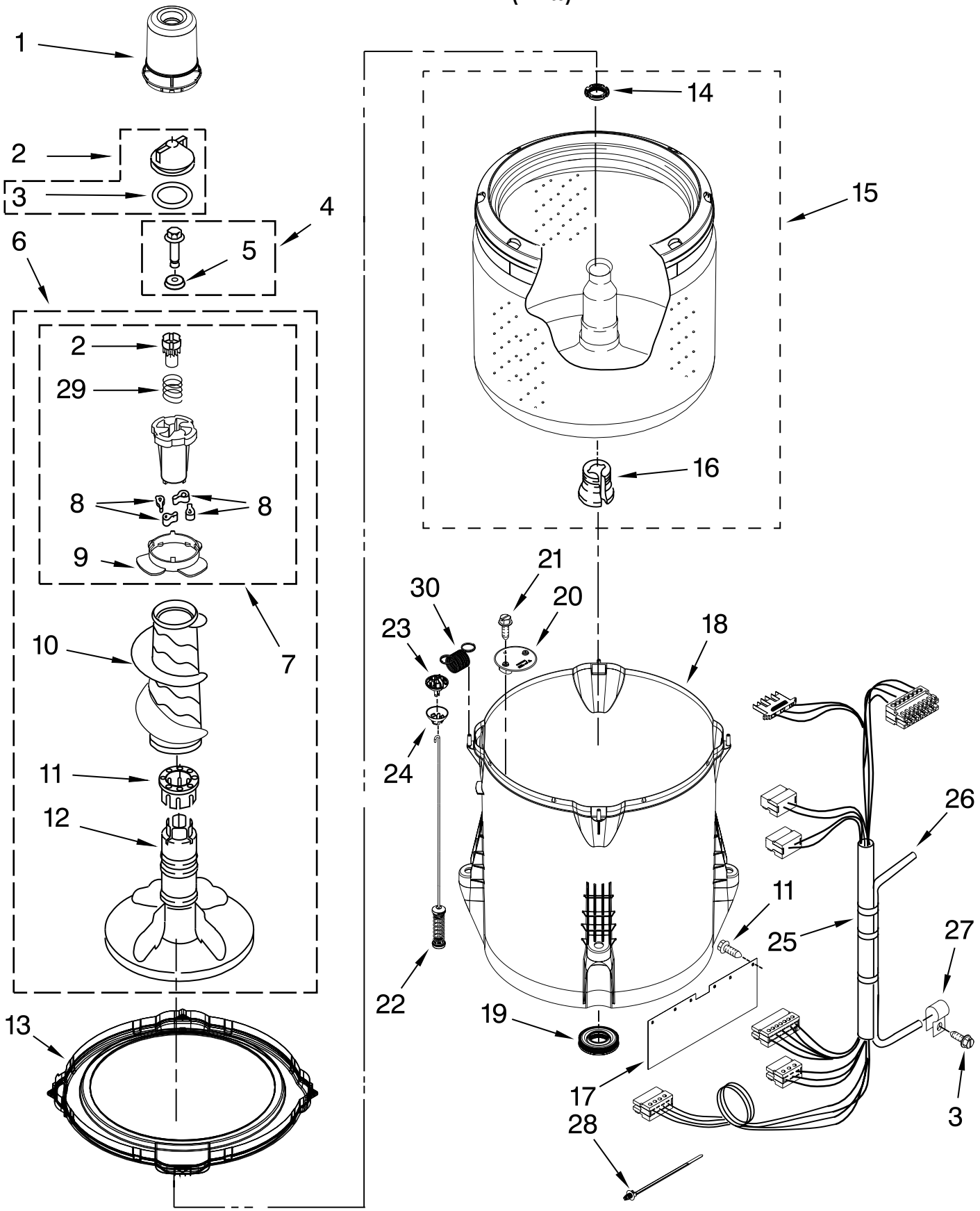

FOR ORDERING INFORMATION REFER TO PARTS PRICE LIST

BASKET AND TUB PARTS

For Model: 7MWTW1808AW0

(White)

Illus. No.	Part No.	DESCRIPTION
1	8528278	Dispenser, Fabric Softener
2	8533540	Retainer, Spring
3	8533943	Screw
4	W10003790	Screw & Washer Assembly
5	3949550	Washer
6	8538246	Agitator, Complete Assembly
7	8537433	Cam, Driven
8	3366877	Dog, Agitator Clutch
9	8055141	Bearing, Cam
10	3946996	Auger, Agitator
11	W10429200	Retainer, Push In
12	3947517	Agitator
13	W10215108	Ring, Tub
14	21366	Nut, Spanner
15	W10358261	Basket Assembly
16	389140	Block, Basket Drive
17	W10339098	Shield, Splash
18	W10238320	Tub (Includes Item 19)
19	W10006371	Seal, Tub
20	W10215093	Filter, Drain Pump
21	8533928	Screw
22	W10110314	Damper Assembly, Tub Suspension (Set Of 4−Includes Items 23 & 24)
23	W10405423	Ball, Suspension (Set Of 4 − Includes Item 24)
24	W10256551	Bushing, Suspension (Set Of 4 − Includes Item 23)
25	W10454996	Harness, Lower (Includes Items 26 & 29)
26	353244	Hose, Pressure Switch
27	W10005430	Clamp, Pressure Hose Retainer
28	W10298887	Cable Tie
29	3946997	Spring, Compression
30	W10348658	Spring, Tub Centering

GEARCASE, MOTOR AND PUMP PARTS

For Model: 7MWTW1808AW0

(White)

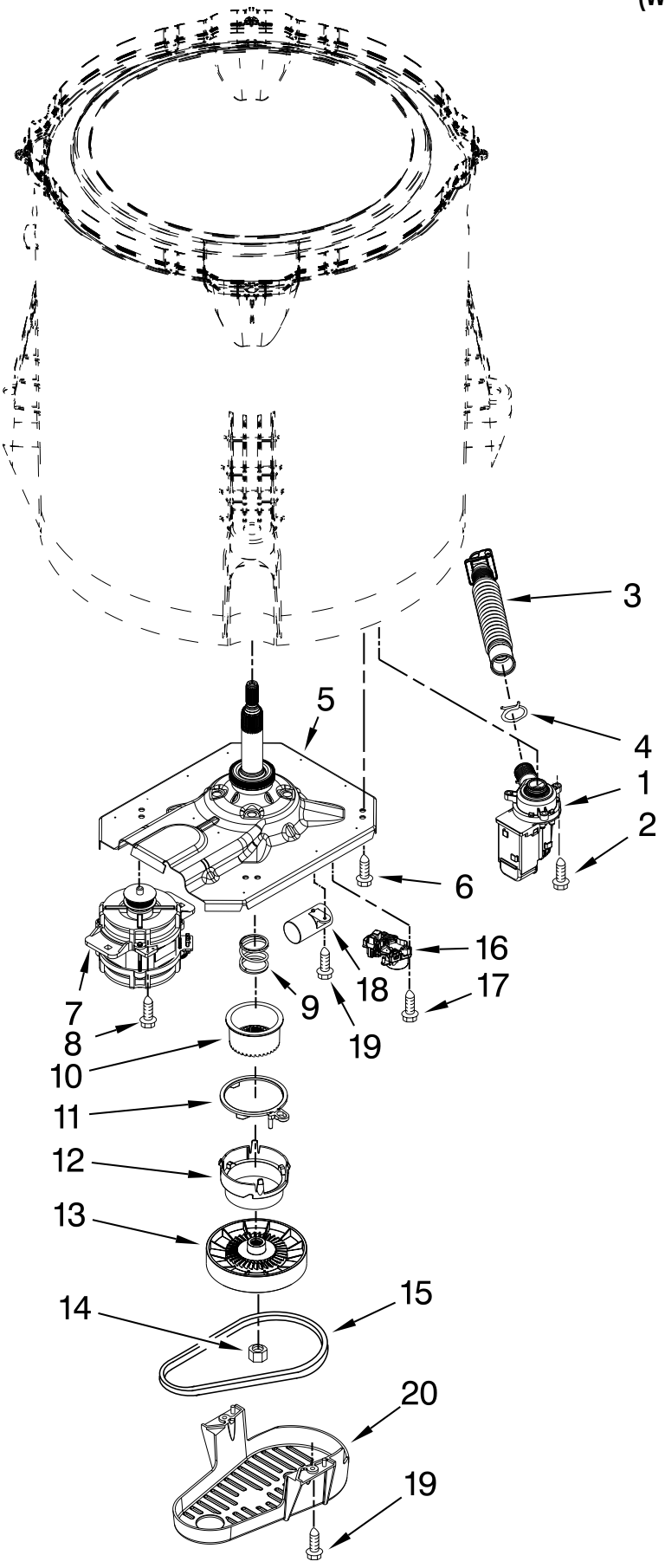

Illus. No.	Part No.	DESCRIPTION
1	W10465543	Pump Assembly, Drain
2	W10004910	Screw
3	W10215091	Hose, Inner Drain Assembly
4	8317496	Clamp, Hose
5	W10473144	Gearcase Assembly
6	W10249633	Screw
7	W10416652	Motor, Drive
8	W10094780	Screw
9	W10006382	Spring, Splutch (Includes Items 10, 11, 12 & 13)
10	W10006352	Slider, Splutch (Includes Items 9, 11, 12 & 13)
11	W10006353	Cam Ring, Splutch (Includes Items 9, 10, 12 & 13)
12	W10006354	Cam, Splutch (Includes Items 9, 10, 11 & 13)
13	W10006356	Pulley
14	W10163336	Nut, Pulley
15	W10006384	Belt, Drive
16	W10006355	Actuator, Shift
17	9741052	Screw
18	W10390451	Capacitor, Motor Run
19	357640	Screw
20	W10427633	Shield, Pulley Cover

FOR ORDERING INFORMATION REFER TO PARTS PRICE LIST

OPTIONAL PARTS (NOT INCLUDED)

For Model: 7MWTW1808AW0
(White)

Illus. No.	Part No.	DESCRIPTION
PAINT, TOUCH−UP (1/2oz.)		
	72017	White
PAINT, PRESSURIZED SPRAY (12 oz.)		
	350938	Primer, Gray
	350930	White
PAINT, BULK (1 qt.)		
	799344	White (Uncut)

Illus. No.	Part No.	DESCRIPTION
WATER SYSTEM PARTS		
	285834	Siphon Break Kit
	367031	Drain Protector
	3363920	Adapter, Standpipe 2" Diameter to 1" Diameter
	DRNEXT4	Drain Hose Extension Kit
SEALER		
	285195	Sealer, Gasket (.20 Fl. Oz.) (6 ml)
COUPLING		
	384496	Coupling, Hose

Illus. No.	Part No.	DESCRIPTION
ACCESSORY PARTS		
	8212526	Washer Drip Tray
	8212546RP	Inlet Hoses, 4 Ft. (Two Black Hoses W/Straight Ends & 4 Rubber Washers)
	8212641RP	Inlet Hoses, 5 Ft. (Two Black Hoses W/Straight Ends & 4 Rubber Washers)
	8212545RP	Inlet Hoses, 5 Ft. (One Red Hose & One Blue Hose W/Straight Ends & 4 Rubber Washers)
	8212487RP	Inlet Hoses, 5 Ft. (Two Braided Hoses W/Straight Ends & 4 Rubber Washers)
	8212637RP	Inlet Hoses, 6 Ft. (Two Black Hoses W/ One Straight End & One 90 Degree End & 4 Rubber Washers)
	8212638RP	Inlet Hoses, 6 Ft. (Two Braided Hoses W/ One Straight End & One 90 Degree End & 4 Rubber Washers)
	8212656RP	Inlet Hoses, 10 Ft (Two Black Hoses W/ Straight Ends & 4 Rubber Washers)
	285448A	Hose Washers (Package of 4)
	285452A	Hose Screen (Package of 2)
	W10355010	All Purpose Appliance Cleaner
	W10135699	Affresh Odor Remover