24" DISHWASHER

DETAILED PLANNING DIMENSIONS GUIDE

JDTSS246G, JDTSS244G, JDTSS245G, JDTSS243G, JDTSS247HS
23 7/8" (W) x 33 7/8" (H) x 24" (Depth without door panel/handles)

OPTIONAL ACCESSORIES FOR CUSTOM OVERLAY DESIGNS

RISE™ STAINLESS HANDLE KIT

- W 11231237
- For use with Custom Overlay panels
- Quantity - One handle per kit

NOIR™ STAINLESS HANDLE KIT

- W 11231236
- For use with Custom Overlay panels
- Quantity - One handle per kit

Because Whirlpool Corporation policy includes a continuous commitment to improve our products, we reserve the right to change materials and specifications without notice.

Dimensions are for planning purposes only. For complete details, see Installation Instructions packed with product. Specifications subject to change without notice.

24" DISHWASHER

DETAILED PLANNING DIMENSIONS GUIDE

JDTSS246G, JDTSS244G, JDTSS245G, JDTSS243G, JDTSS247HS

23 7/8" (W) x 33 7/8" (H) x 24" (Depth without door panel/handles)

PRODUCT DIMENSIONS

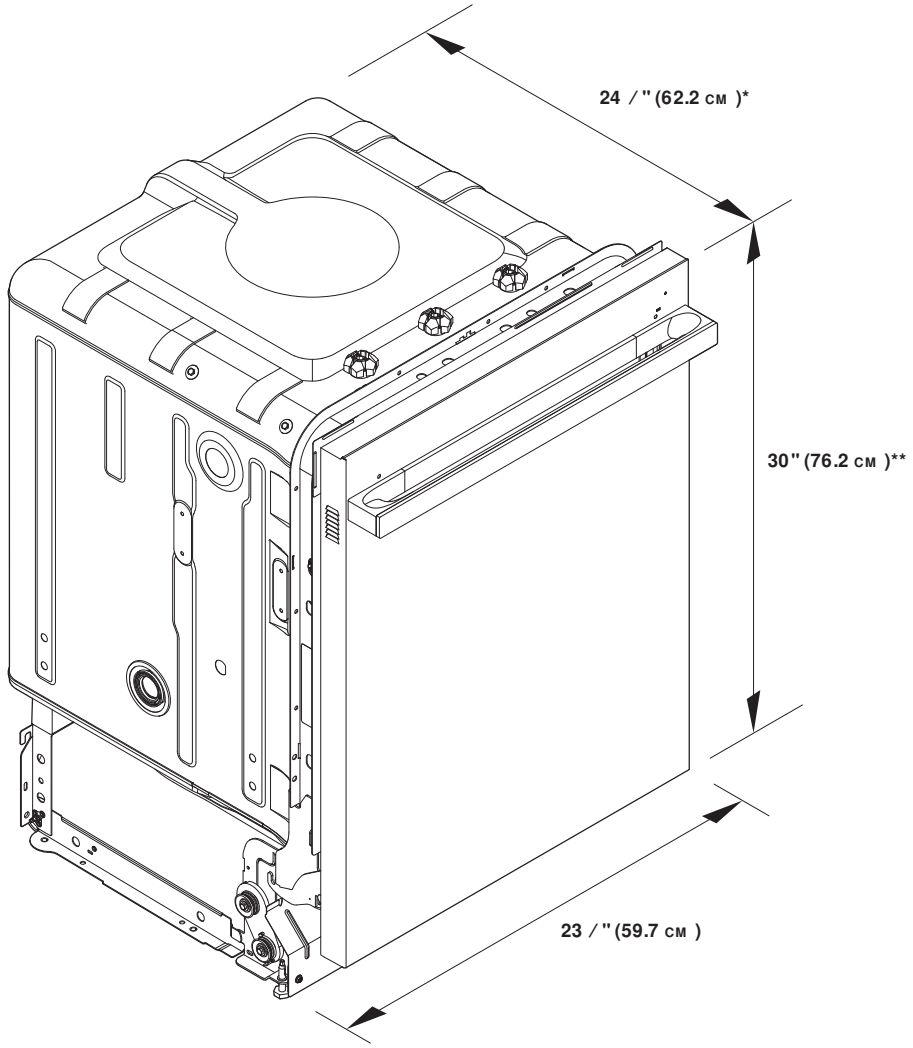

*For custom panel models, this value may change.

**With wheels removed. Add up to 1" (2.5 cm) to height with wheels and leg levelers fully extended.

Because Whirlpool Corporation policy includes a continuous commitment to improve our products, we reserve the right to change materials and specifications without notice.

Dimensions are for planning purposes only. For complete details, see Installation Instructions packed with product. Specifications subject to change without notice.

24" DISHWASHER

DETAILED PLANNING DIMENSIONS GUIDE

JDTSS246G, JDTSS244G, JDTSS245G, JDTSS243G, JDTSS247HS
23 /" (W) x 33 /" (H) x 24" (Depth without door panel/handles)

PRODUCT DIMENSIONS CONTD.

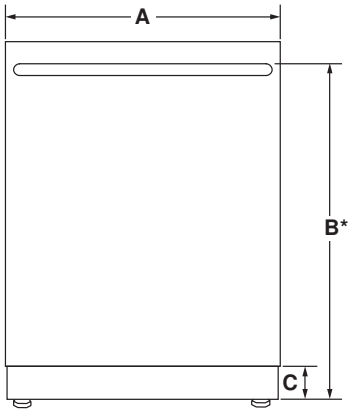

FRONT VIEW

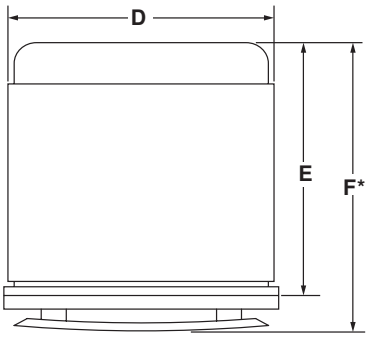

TOP VIEW

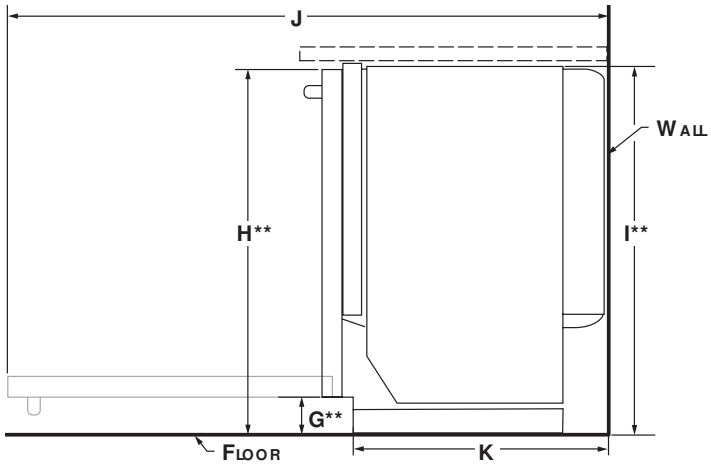

SIDE VIEW

	DESCRIPTION	JDTSS246G, JDTSS244G	JDTSS245G, JDTSS243G	JDTSS247HS
A	Width of door	23 /" (60.6 cm)	23 /" (60.6 cm)	23 /" (60.6 cm)
B*	Height to top of handle	31 /" (80.1cm)	-	
C	Height of adjustable toe kick	3 /" (8.8 cm) - min. 4 /" (10.6 cm)- max.	3 /" (8.8 cm) - min. 4 /" (10.6 cm)- max.	3 /" (8.8 cm) - min. 4 /" (10.6 cm)- max.
D	Width of recessed dishwasher	23 /" (60.6 cm)	23 /" (60.6 cm)	23 /" (60.6 cm)
E*	Depth without handle	22 /" (57.4 cm)	22 /" (57.4 cm)	22 /" (57.4 cm)
F*	Depth with handle Pro-Style® Stainless	29 /" (73.9 cm)	-	-
	Euro-Style Stainless	28 /" (72.6 cm)	-	-
	RISE™ Stainless	28 /" (72.7 cm)	-	-
	NOIR™ Stainless	28 /" (72.6 cm)	-	-
G**	Height to bottom of door	3 /" (9.4 cm)	3 /" (9.4 cm)	3 /" (9.4 cm)
H**	Height to top of door (min.)	33 /" (85.7 cm)	33 /" (85.7 cm)	33 /" (85.1cm)
I**	Height of recessed dishwasher (min.)	33 /" (85.5 cm)	33 /" (85.5 cm)	-
J	Depth with door fully open (min.)	49 /" (125.7 cm)	49 /" (125.7 cm)	-
K	Depth with toe kick (min.)	20 /" (52.9 cm)	20 /" (52.9 cm)	21" (533 mm)

Because Whirlpool Corporation policy includes a continuous commitment to improve our products, we reserve the right to change materials and specifications without notice.

Dimensions are for planning purposes only. For complete details, see Installation Instructions packed with product. Specifications subject to change without notice.

24" DISHWASHER

DETAILED PLANNING DIMENSIONS GUIDE

JDTSS246G, JDTSS244G, JDTSS245G, JDTSS243G, JDTSS247HS
23 ⁄ " (W) x 33 ⁄ " (H) x 24" (Depth without door panel/handles)

OPENING CLEARANCE DIMENSIONS

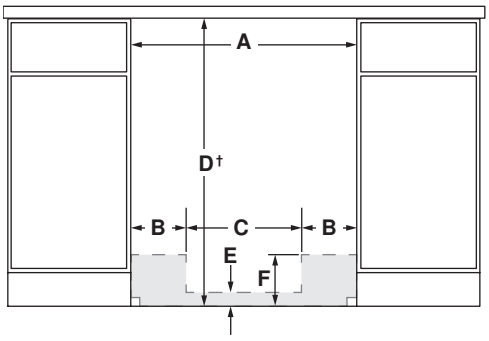

FRONT VIEW

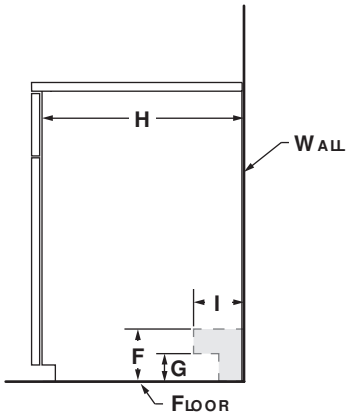

SIDE VIEW

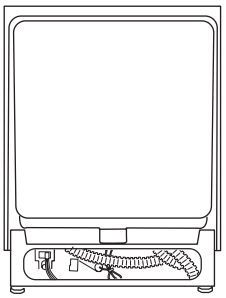

BACK VIEW

	DESCRIPTION	JDTSS246G, JDTSS244G, JDTSS245G, JDTSS243G, JDTSS247HS
A	Width (min.)	24" (61cm)
B	Width of possible utility installation area (back wall)	6 ⁄ " (17.2 cm)
C	Width of clear area (back wall)	10 ⁄ " (26.7 cm)
D†	Height with wheels removed (min.)	34" (86.4 cm)
E	Height of possible utility installation area (back wall)	2 ⁄ " (6.4 cm)
F	Height of possible utility installation area (back/side wall)	6 ⁄ " (15.9 cm)
G	Height of clear area (side wall)	3" (7.6 cm)
H	Depth (min.)	24" (61cm)
I	Depth of utility location (side wall)	4" (10.2 cm)
Recommended drain connection location – closest to sink		1 ⁄ " (3.8 cm) dia.
Recommended electrical connection location – right-hand side or back wall		1 ⁄ " (3.8 cm) dia.
Recommended water connection location – left-hand side or back wall		1/2" (1.3 cm) dia.

†Measured from the lowest point on the underside of countertop.

NOTE: Shaded areas indicate recommended locations of electrical, water and drain connections.

LOCATION REQUIREMENTS

Corner locations require a 2" (5.1cm) minimum clearance between the side of the dishwasher door and the wall or cabinet.

Because Whirlpool Corporation policy includes a continuous commitment to improve our products, we reserve the right to change materials and specifications without notice.

Dimensions are for planning purposes only. For complete details, see Installation Instructions packed with product. Specifications subject to change without notice.

24" DISHWASHER

DETAILED PLANNING DIMENSIONS GUIDE

JDTSS246G, JDTSS244G, JDTSS245G, JDTSS243G, JDTSS247HS
23 /" (W) x 33 /" (H) x 24" (Depth without door panel/handles)

WOOD PANEL GUIDE

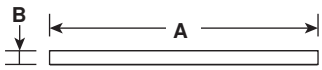

WOOD PANEL - TOP VIEW

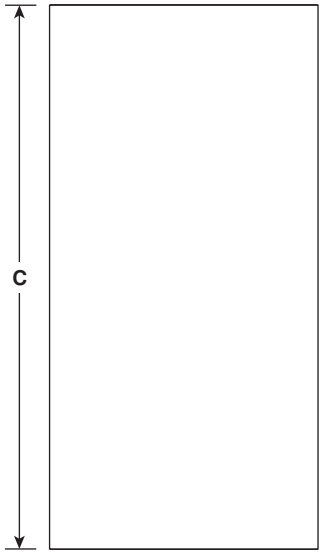

WOOD PANEL - FRONT VIEW

	DESCRIPTION	JDTSS245G, JDTSS243G
A	Width	23 /" (60 cm)
B	Thickness	3/4" (1.91cm)
C	Height	29 / " (76 cm)

INSTALLATION NOTES

- Overlay panel thickness is 3/4" (1.90 cm).
- Maximum panel weight (including handle) is 14.7 lbs (6.7 kg).
- Panel dimensions shown are the minimum size to cover the appliance door. The resulting top and side reveals are 3/16". Panels can be made taller/wider to match surrounding cabinetry.
- Minimum opening height: 34" (86.36 cm).

Because Whirlpool Corporation policy includes a continuous commitment to improve our products, we reserve the right to change materials and specifications without notice.

Dimensions are for planning purposes only. For complete details, see Installation Instructions packed with product. Specifications subject to change without notice.

ELECTRICAL REQUIREMENTS

⚠WARNING

Electrical Shock Hazard

Plug into a grounded 3 prong outlet.

Do not remove ground prong.

Do not use an adapter.

Do not use an extension cord.

Failure to follow these instructions can result in death, fire, or electrical shock.

120 V, 60 Hz, AC-only, 15 A or 20 A fused electrical supply. Copper wire only. A time delay fuse or circuit breaker and separate circuit is recommended.

WATER SUPPLY REQUIREMENTS

120°F (49°C) hot water supply with water pressure between 20 psi and 120 psi (138 kPa and 862 kPa) is required. If you have questions about your water pressure, call a licensed, qualified plumber.

DRAIN REQUIREMENTS

Connect drain hose to waste tee or disposer inlet above drain trap. Maximum recommended length of drain hose is 12 ft (3.7 m) that meets all current AHAM/IAPMO test standards and is resistant to heat and detergent.

®/™ ©2019 JennAir. All rights reserved.