18" COLUMN FREEZER

DETAILED PLANNING DIMENSIONS GUIDE

JBZFR18IGX, JBZFL18IGX and ALOVE18FLC

17¾" (W) x 83 / " (H) x 23 / " (Depth without door panels/handles)

Choose one of following configuration to match your kitchen design.

Base Unit (Panel Ready)	Base Unit+Stainless Panel Kits			
	RISE™ Stainless Panel	NOIR™ Stainless	Euro-Style Stainless Panel	Pro-Style® Stainless Steel Panel
Column freezer JBZFR18IGX, JBZFL18IGX, ALOVE18FLC				
	LH: JKCPL181GL, RH: JKCPR181GL	LH: JKCPL181GM, RH: JKCPR181GM	LH: JKCPL181GS, RH: JKCPR181GS	LH: JKCPL181GP, RH: JKCPR181GP

OPTIONAL ACCESSORIES FOR CUSTOM OVERLAY DESIGNS

RISE™ STAINLESS HANDLE KIT

- W11220303
- For use with Custom Overlay panels
- Quantity - One handle per kit

EURO STYLE HANDLE KIT COLUMNS

- W11220300
- For use with Custom Overlay panels
- Quantity - One handle per kit

NOIR™ STAINLESS HANDLE KIT

- W11220302
- For use with Custom Overlay panels
- Quantity - One handle per kit

PRO STYLE® HANDLE KIT COLUMNS

- W11220299
- For use with Custom Overlay panels
- Quantity - One handle per kit

JOIN KITS FOR MULTIPLE UNIT INSTALLATIONS

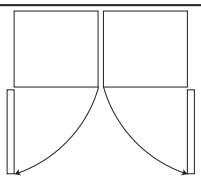	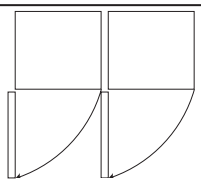	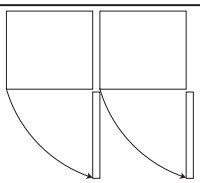	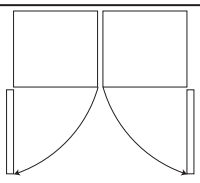
Handle-to-handle join kit (JAJ13HSS)	Handle-to-hinge join kit (JAJ11HSS)	Hinge-to-handle join kit (JAJ12HSS)	Burlesque Handle-to-handle join kit (JAJ14JSS)

Because Whirlpool Corporation policy includes a continuous commitment to improve our products, we reserve the right to change materials and specifications without notice.

Dimensions are for planning purposes only. For complete details, see Installation Instructions packed with product. Specifications subject to change without notice.

W 11356522B

18" COLUMN FREEZER

DETAILED PLANNING DIMENSIONS GUIDE

JBZFR18IGX, JBZFL18IGX and ALOVE18FLC

17¾" (W) x 83 / " (H) x 23 / " (Depth without door panels/handles)

PRODUCT DIMENSIONS

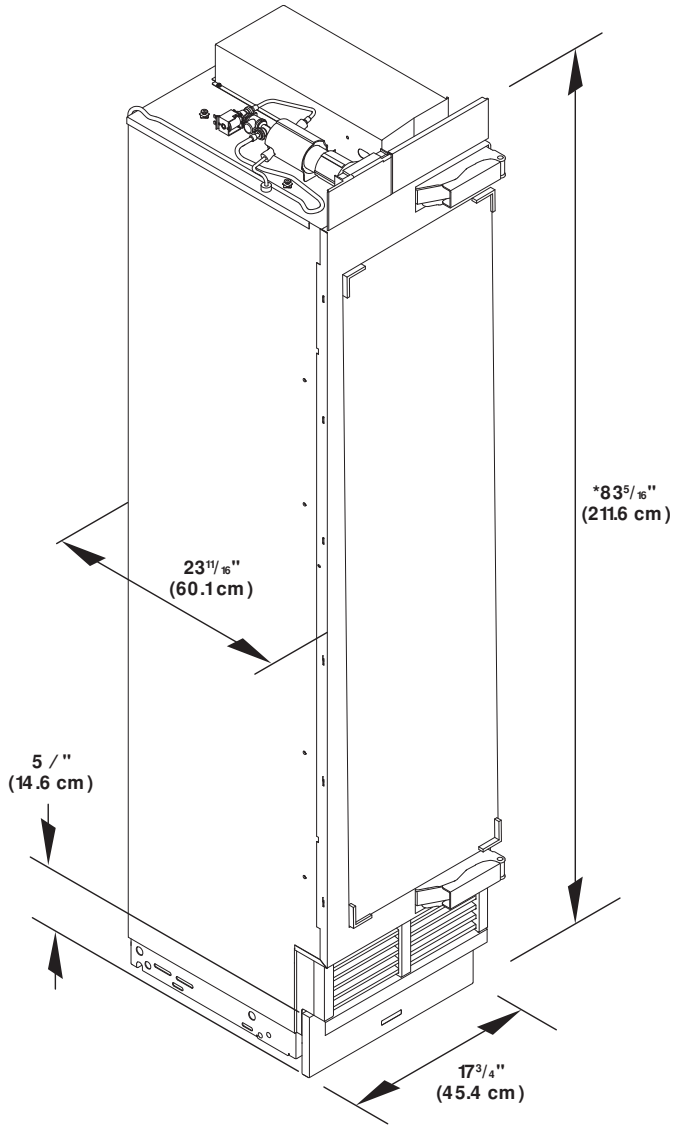

*Add 1" (2.5 cm) to the height dimension when leveling legs are fully extended.

Because Whirlpool Corporation policy includes a continuous commitment to improve our products, we reserve the right to change materials and specifications without notice.

Dimensions are for planning purposes only. For complete details, see Installation Instructions packed with product. Specifications subject to change without notice.

18" COLUMN FREEZER

DETAILED PLANNING DIMENSIONS GUIDE

JBZFR18IGX, JBZFL18IGX and ALOVE18FLC

17¾" (W) x 83 / " (H) x 23 / " (Depth without door panels/handles)

PRODUCT DIMENSIONS

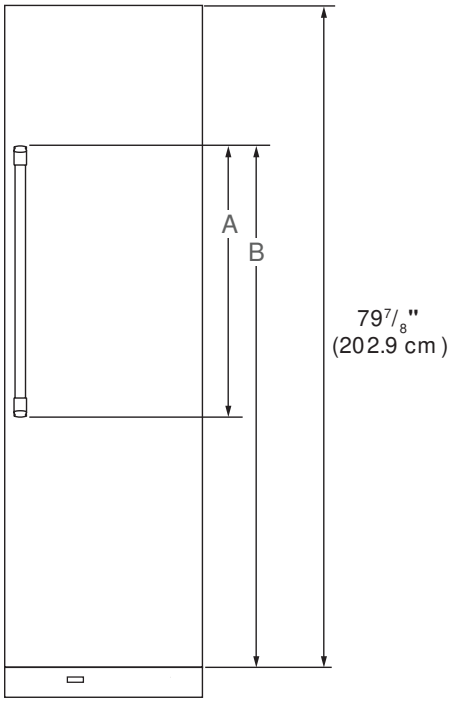

FRONT VIEW

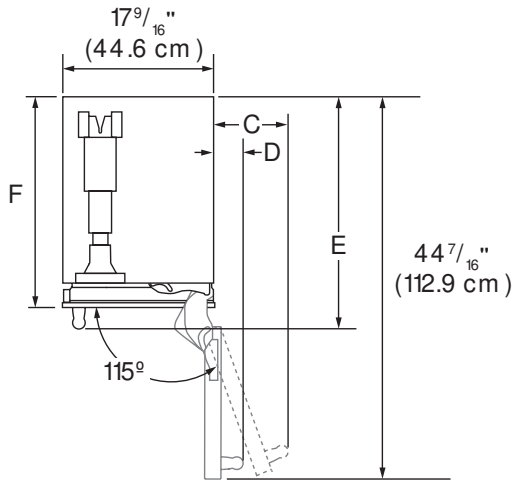

TOP VIEW

DIMENSION	DESCRIPTION	JBZFR18IGX, JBZFL18IGX, ALOVE18FLC
A	**Height of door handle** RISE™ Stainless	57 / " (147.2 cm)
	NOIR™ Stainless	40 /" (103.2 cm)
	Euro-Style Stainless	50 / " (127.1 cm)
	Pro-Style® Stainless	45 / " (115.7 cm)
	Custom panel (3/4" thick)	** **
B	**Height to top of door handle** RISE™ Stainless	70 /" (179.7 cm)
	NOIR™ Stainless	68 / " (174.5 cm)
	Euro-Style Stainless	68 / " (173.4 cm)
	Pro-Style® Stainless	66 / " (167.7 cm)
	Custom panel (3/4" thick)	** **
C	**Width from side of freezer to handle – door fully open 115°**	10 /" (26.7 cm)
D	**Width from side of freezer to handle – door open 90°**	5" (12.7 cm)
E	**Depth with handle** RISE™ Stainless	26 /" (67.7 cm)
	NOIR™ Stainless	26 / " (67.5 cm)
	Euro-Style Stainless	26 / " (67.4 cm)
	Pro-Style® Stainless	27 /" (68.9 cm)
	Custom panel (3/4" thick)	** **
F	**Depth with door**	24 /" (62.2 cm)

**For custom panel models, this depends on handle chosen.

Because Whirlpool Corporation policy includes a continuous commitment to improve our products, we reserve the right to change materials and specifications without notice.

Dimensions are for planning purposes only. For complete details, see Installation Instructions packed with product. Specifications subject to change without notice.

18" COLUMN FREEZER

DETAILED PLANNING DIMENSIONS GUIDE

JBZFR18IGX, JBZFL18IGX and ALOVE18FLC

17¾" (W) x 83 / " (H) x 23 / " (Depth without door panels/handles)

OPENING DIMENSIONS

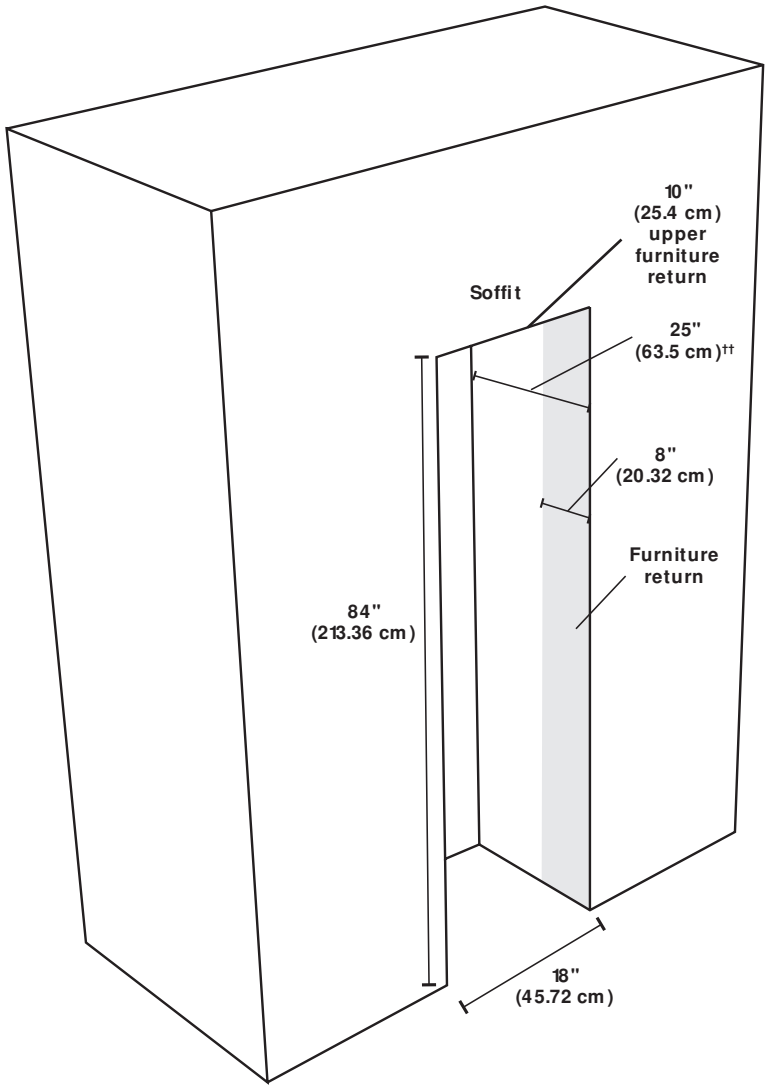

††24" with 24" trim kit.

Because Whirlpool Corporation policy includes a continuous commitment to improve our products, we reserve the right to change materials and specifications without notice.

Dimensions are for planning purposes only. For complete details, see Installation Instructions packed with product. Specifications subject to change without notice.

18" COLUMN FREEZER

DETAILED PLANNING DIMENSIONS GUIDE

JBZFR18IGX, JBZFL18IGX and ALOVE18FLC

17¾" (W) x 83 / " (H) x 23 / " (Depth without door panels/handles)

TOP VIEW - CABINET OPENING

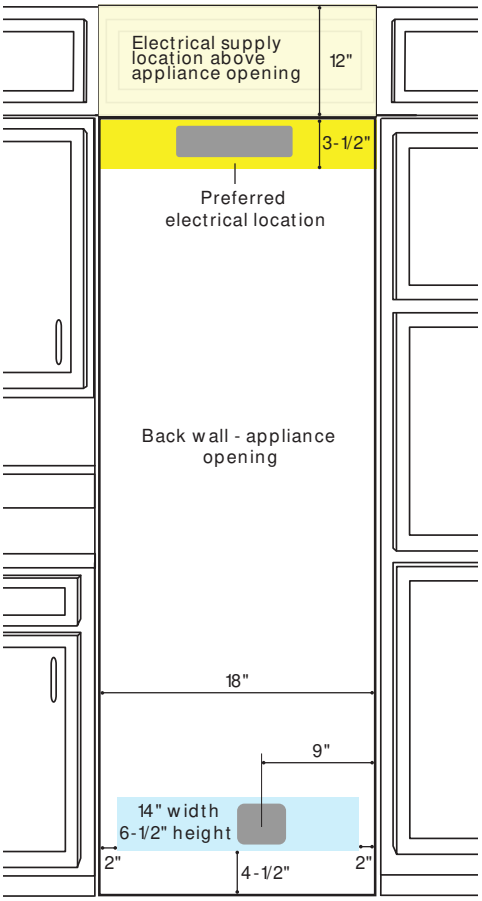

water supply location behind unit
(also approved for electrical supply)

FRONT VIEW - CABINET OPENING

ELECTRICAL SUPPLY LOCATION

- Lighter yellow area indicates electrical supply located in a cabinet or accessible space above the unit opening.
- Power cord length is 9ft and originates from the front right corner of the unit.
- There is room for a surface mount electrical outlets within the top 3 / " of the opening.
- Darker yellow area indicates the electrical supply location within the top of the opening.
- Outlet should be located near the center of the allowable area for easy connection and disconnection after installation.

WALL WATER SUPPLY LOCATIONS

- Water outlet area shown in blue.
- Water outlet area is also approved for the electrical outlet location.
- Outlet area width and height corresponds to a 3/4" deep recessed area found on the back of all unit.
- Targeting the left side of the allowable area allows for additional water line routing flexibility and easier water line management under the unit.

FLOOR WATER SUPPLY LOCATIONS

- There is no floor access through an 18" unit.

Because Whirlpool Corporation policy includes a continuous commitment to improve our products, we reserve the right to change materials and specifications without notice.

Dimensions are for planning purposes only. For complete details, see Installation Instructions packed with product. Specifications subject to change without notice.

18" COLUMN FREEZER

DETAILED PLANNING DIMENSIONS GUIDE

JBZFR18IGX, JBZFL18IGX and ALOVE18FLC

17¾" (W) x 83 / " (H) x 23 / " (Depth without door panels/handles)

ELECTRICAL REQUIREMENTS

⚠WARNING

Electrical Shock Hazard

Plug into a grounded 3 prong outlet.

Do not remove ground prong.

Do not use an adapter.

Do not use an extension cord.

Failure to follow these instructions can result in death, fire, or electrical shock.

115 V, 60 Hz, AC only, 15 A or 20 A fused, grounded circuit is required. A dedicated circuit is recommended. Use an outlet that cannot be turned off by a switch. Do not use an extension cord.

WATER PRESSURE REQUIREMENTS

A cold water supply with water pressure between 40 and 120 psi (207 kPa and 827 kPa) is required to operate the ice maker. Call a licensed, qualified plumber with any questions about the water pressure.

REVERSE OSMOSIS WATER SUPPLY

A reverse osmosis system may be used provided that the water pressure from the filtration system meets the required water pressure requirements.

JennAir® Columns feature an auto-bypass water filtration system. To use your product with a reverse osmosis water filtration system, simply remove the water filter from the product.

LOCATION REQUIREMENTS

⚠WARNING

Explosion Hazard

Keep flammable materials and vapors, such as gasoline, away from freezer.

Failure to do so can result in death, explosion, or fire.

Floor must be able to support the product's total weight of more than 600 lb (272 kg), including the door panels and contents of the product. Flooring under product must be at the same level as the room. Face of cabinetry must be plumb.

Because Whirlpool Corporation policy includes a continuous commitment to improve our products, we reserve the right to change materials and specifications without notice.

Dimensions are for planning purposes only. For complete details, see Installation Instructions packed with product. Specifications subject to change without notice.

18" COLUMN FREEZER

DETAILED PLANNING DIMENSIONS GUIDE

JBZFR18IGX, JBZFL18IGX and ALOVE18FLC

17¾" (W) x 83 / " (H) x 23 / " (Depth without door panels/handles)

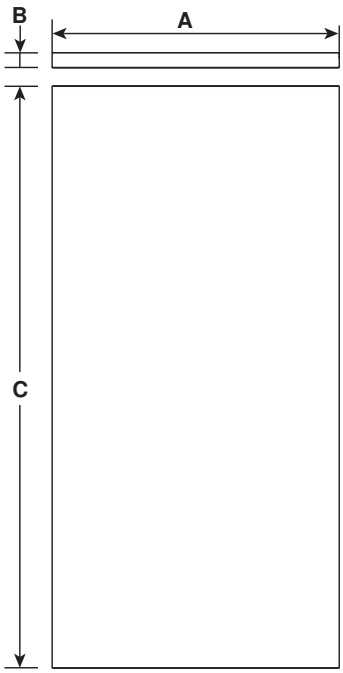

FRONT VIEW

Thickness (B)	3/4" (1.9 cm) max.
Weight	60 lbs. (27.2 kg) max.
Height (C)	79 / " (202.9 cm)

WOOD PANEL GUIDE

⚠CAUTION

Pinch Hazard

Installation of door panels with less than a 3/" (0.95 cm) gap between the door panel and the adjacent cabinet increases the risk of potential pinching.

MODEL	FLUSH WIDTH (A)
18"	17¾" (45.1cm)

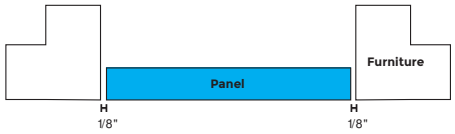

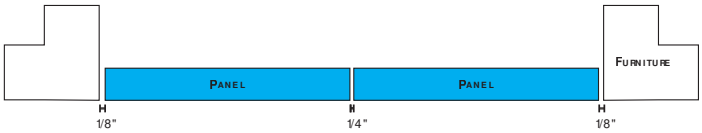

Because Whirlpool Corporation policy includes a continuous commitment to improve our products, we reserve the right to change materials and specifications without notice.

Dimensions are for planning purposes only. For complete details, see Installation Instructions packed with product. Specifications subject to change without notice.

®/™ ©2019 JennAir. All rights reserved.