27" (68.6 cm) and 30" (76.2 cm) Electric Single and Double Built-In Oven

PRODUCT MODEL NUMBERS

MEW9527F MEW9627F MEW9630F
MEW9530F

ELECTRICAL REQUIREMENTS

To properly install your oven, you must determine the type of electrical connection you will be using and follow the instructions provided for it here.

- Oven must be connected to the proper electrical voltage and frequency as specified on the model/serial number rating plate. The model/serial number rating plate is located under the control panel on single ovens and under the control panel on the upper oven cavity on double ovens. See the following illustrations.

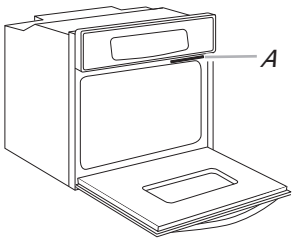

Single Oven
A. Model/serial number plate

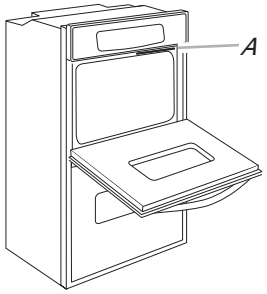

Double Oven
A. Model/serial number plate

- Models rated from 7.3 to 9 kW at 240 volts (5.4 to 7.4 kW at 208 volts) require a separate 40-amp circuit. Models rated at 4.8 kW and below at 240 volts (3.6 kW and below at 208 volts) require a separate 20-amp circuit.
- A circuit breaker is recommended.

PRODUCT DIMENSIONS

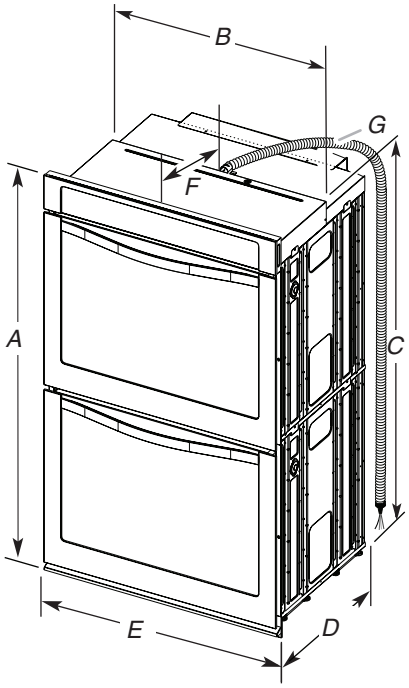

27" (68.6 cm) models

A. 51 3/16" (130.0 cm) max. overall height
B. 25 7/16" (64.6 cm) max. recessed width
C. 48 13/16" (124.0 cm) recessed height
D. 23 1/4" (59.1 cm) max. recessed depth
E. 27" (68.6 cm) overall width
F. 12" (30.5 cm) from back of control panel to start of strain relief
G. 66" (167.6 cm) flexible conduit length

30" (76.2 cm) models

A. 51 3/16" (130.0 cm) max. overall height
B. 28 1/2" (72.4 cm) max. recessed width
C. 48 13/16" (124.0 cm) recessed height
D. 23 1/4" (59.1 cm) max. recessed depth
E. 30" (76.2 cm) overall width
F. 12" (30.5 cm) from back of control panel to start of strain relief
G. 66" (167.6 cm) flexible conduit length

PRODUCT DIMENSIONS

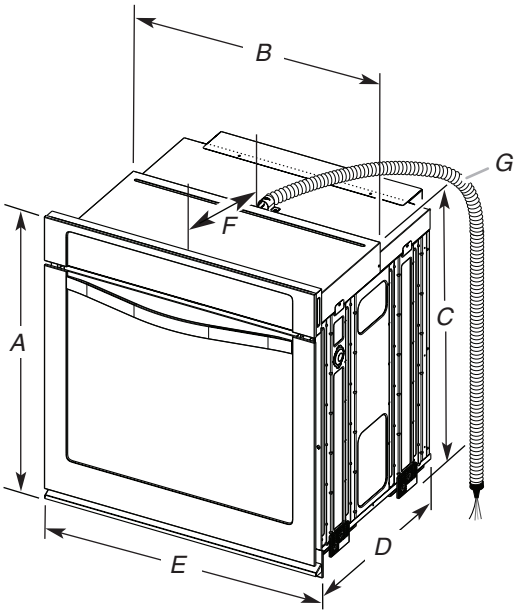

27" (68.6 cm) models

A. 28 1/4" (72.8 cm) max. overall height
B. 25 7/16" (64.6 cm) max. recessed width
C. 26 3/4" (67.9 cm) recessed height
D. 23 1/4" (59.1 cm) max. recessed depth
E. 27" (68.6 cm) overall width
F. 12" (30.5 cm) from back of control panel to start of strain relief
G. 48" (121.9 cm) flexible conduit length

30" (76.2 cm) models

A. 28 3/4" (72.8 cm) max. overall height
B. 28 1/2" (72.4 cm) max. recessed width
C. 26 3/4" (67.9 cm) recessed height
D. 23 1/4" (59.1 cm) max. recessed depth
E. 30" (76.2 cm) overall width
F. 12" (30.5 cm) from back of control panel to start of strain relief
G. 48" (121.9 cm) flexible conduit length

Because Whirlpool Corporation includes a continuous commitment to improve our products, we reserve the right to change materials and specifications without notice.

Dimensions are for planning purposes only. For complete details, see Installation Instructions packed with product. Specifications subject to change without notice.

Ref. W10674133A
07/27/2016

CABINET OPENING DIMENSIONS

27" (68.6 cm) and 30" (76.2 cm) Single Oven Undercounter (without cooktop installed above)

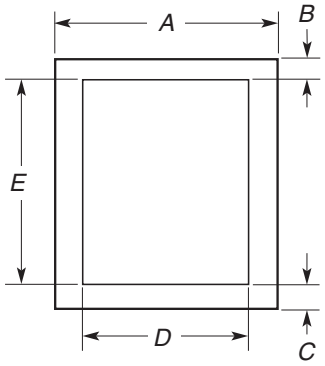

27" (68.6 cm) models

A. 27" (68.6 cm) min. cabinet width
B. 1 1/2" (3.8 cm) min. top of cutout to underside of countertop
C. 5 1/4" (13.3 cm) bottom of cutout to floor
D. 25 1/2" (64.8 cm) cutout width
E. 28" (71.2 cm) min. cutout height

30" (76.2 cm) models

A. 30" (76.2 cm) min. cabinet width
B. 1 1/2" (3.8 cm) min. top of cutout to underside of countertop
C. 5 1/4" (13.3 cm) bottom of cutout to floor
D. 28 1/2" (72.4 cm) cutout width
E. 28" (71.2 cm) min. cutout height

Double Ovens Installed in Cabinet

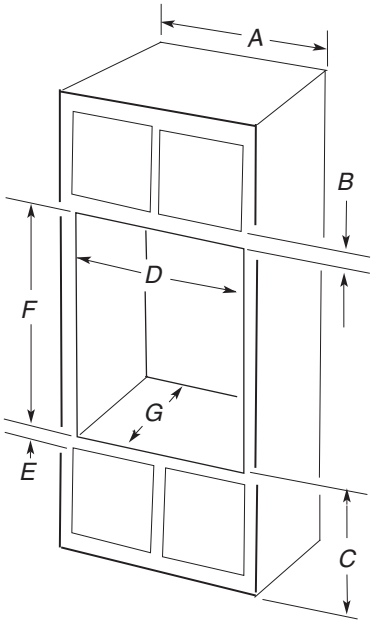

27" (68.6 cm) models

A. 27" (68.6 cm) min. cabinet width
B. 1" (2.5 cm) top of cutout to bottom of upper cabinet door
C. 14 3/4" (37.5 cm) bottom of cutout to floor is recommended. 4"-14 3/4" (10.2-37.5 cm) bottom of cutout to floor is acceptable.
D. 25 1/2" (64.8 cm) cutout width
E. 1 1/2" (3.8 cm) min. bottom of cutout to top of cabinet door
F. 50 1/4" (127.6 cm) recommended cutout height*
G. 24" (60.7 cm) cutout depth

30" (76.2 cm) models

A. 30" (76.2 cm) min. cabinet width
B. 1" (2.5 cm) top of cutout to bottom of upper cabinet door
C. 14 3/4" (37.5 cm) bottom of cutout to floor is recommended. 4"-14 3/4" (10.2-37.5 cm) bottom of cutout to floor is acceptable.
D. 28 1/2" (72.4 cm) cutout width
E. 1 1/2" (3.8 cm) min. bottom of cutout to top of cabinet door
F. 50 1/4" (127.6 cm) recommended cutout height*
G. 24" (60.7 cm) cutout depth

NOTE: The cutout height can be between 48 7/8" (124.1 cm) and 52 3/16" (132.6 cm) for double ovens.

Single Ovens Installed in Cabinet

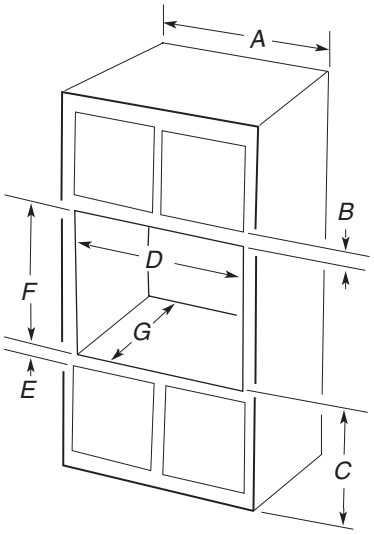

27" (68.6 cm) models

A. 27" (68.6 cm) min. cabinet width
B. 1" (2.5 cm) top of cutout to bottom of upper cabinet door
C. 32" (81.3 cm) bottom of cutout to floor
D. 25 1/2" (64.8 cm) cutout width
E. 1 1/2" (3.8 cm) min. bottom of cutout to top of cabinet door
F. 28" (71.2 cm) recommended cutout height*
G. 24" (60.7 cm) cutout depth

30" (76.2 cm) models

A. 30" (76.2 cm) min. cabinet width
B. 1" (2.5 cm) top of cutout to bottom of upper cabinet door
C. 32" (81.3 cm) bottom of cutout to floor
D. 28 1/2" (72.4 cm) cutout width
E. 1 1/2" (3.8 cm) min. bottom of cutout to top of cabinet door
F. 28" (71.2 cm) recommended cutout height*
G. 24" (60.7 cm) cutout depth

NOTE: The cutout height can be between 26 15/16" (68.4 cm) and 29 7/16" (74.8 cm) for single ovens.

Because Whirlpool Corporation includes a continuous commitment to improve our products, we reserve the right to change materials and specifications without notice.

Dimensions are for planning purposes only. For complete details, see Installation Instructions packed with product. Specifications subject to change without notice.

Ref. W10674133A
07/27/2016