French Door Bottom Mount Refrigerator

WRF532SMH, WRF540CWH, WRF535SMH

PRODUCT DIMENSIONS

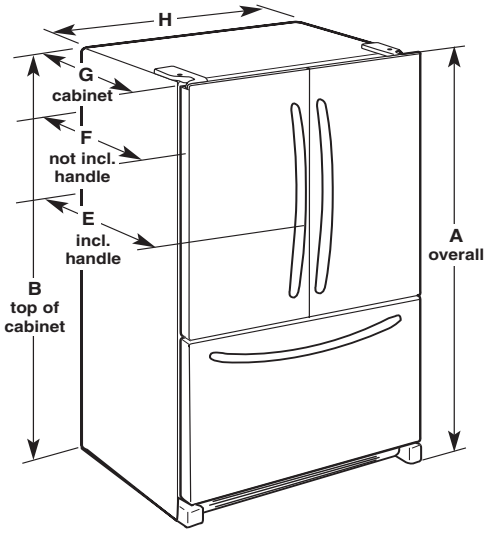

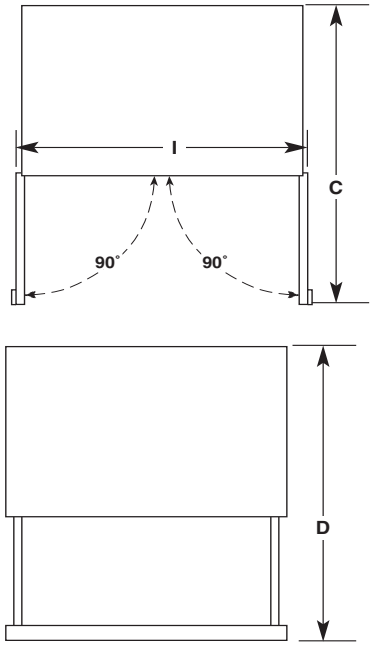

Model Number	WRF532SMH	WRF535SMH	WRF540CWH
Model Size	22.1 cu. ft.	25.2 cu. ft.	20.0 cu. ft.
Height - Overall "A"	70 1/8" (178.1 cm)	70 1/8" (178.1 cm)	70 1/8" (178.1 cm)
Height - Top of Cabinet "B"	68 7/8" (174.9 cm)	68 7/8" (174.9 cm)	68 7/8" (174.9 cm)
Depth - Doors Open 90° "C"	47 1/8" (119.7 cm)	48 1/8" (122.2 cm)	43" (109.2 cm)
Depth - Drawer Open "D"	52 1/8" (132.4 cm)	52 1/8" (132.4 cm)	45 5/8" (115.3 cm)
Depth - With Handles "E"	34 1/2" (87.4 cm)	35 1/2" (89.9 cm)	30 1/2" (77.5 cm)
Depth - Without Handles "F"	32" (81.3 cm)	33" (83.8 cm)	26 7/8" (68.3 cm)
Depth - Cabinet Only "G"	28 1/8" (71.3 cm)	29 1/8" (73.9 cm)	24 1/8" (61.2 cm)
Width - Cabinet "H"	32 5/8" (82.9 cm)	35 5/8" (90.5 cm)	35 5/8" (90.5 cm)
Width - Door Open 90° "I"	40 3/8" (102.6 cm)	43 3/8" (110.2 cm)	43 3/8" (110.2 cm)

⚠WARNING

Electrical Shock Hazard

Plug into a grounded 3 prong outlet.

Do not remove ground prong.

Do not use an adapter.

Do not use an extension cord.

Failure to follow these instructions can result in death, fire, or electrical shock.

Electrical: A 115 V, 60 Hz, AC only 15 A or 20 A fused, grounded electrical supply is required. It is recommended that a separate circuit serving only your refrigerator be provided. Use an outlet that cannot be turned off by a switch. Do not use an extension cord.

NOTE: Before performing any type of installation, cleaning, or removing a light bulb, turn the control (Thermostat, Refrigerator or Freezer Control depending on the model) to OFF and then disconnect the refrigerator from the electrical source. When you are finished, reconnect the refrigerator to the electrical source and reset the control (Thermostat, Refrigerator or Freezer Control depending on the model) to the desired setting. See "Using the Controls."

Water: A cold water supply with water pressure between 35 psi and 120 psi (241 kPa and 827 kPa) is required to operate the water dispenser and ice maker. If you have questions about your water pressure, call a licensed, qualified plumber.

IMPORTANT: The pressure of the water coming out of a reverse osmosis system going to the water inlet valve of the refrigerator needs to be between 35 psi and 120 psi (241 kPa and 827 kPa).

Reverse Osmosis Water Supply:
If a reverse osmosis water filtration system is connected to your cold water supply, the water pressure to the reverse osmosis system needs to be a minimum of 40 psi to 60 psi (276 kPa to 414 kPa).

Because Whirlpool Corporation policy includes a continuous commitment to improve our products, we reserve the right to change materials and specifications without notice.

Dimensions are for planning purposes only. For complete details, see Installation Instructions packed with product. Specifications subject to change without notice.

French Door Bottom Mount Refrigerator

LOCATION REQUIREMENTS

⚠WARNING

Explosion Hazard

Keep flammable materials and vapors, such as gasoline, away from refrigerator.

Failure to do so can result in death, explosion, or fire.

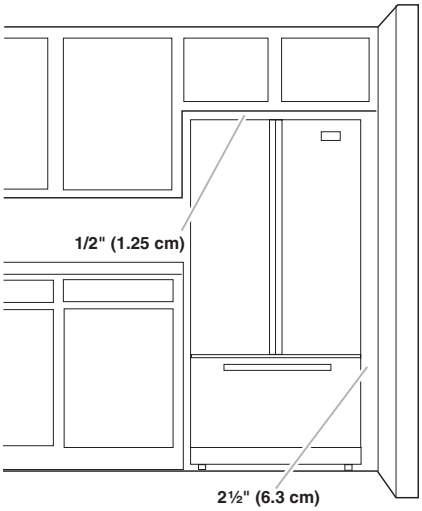

IMPORTANT: This refrigerator is designed only for indoor, household use only.

To ensure proper ventilation for your refrigerator, allow for a 1/2" (1.25 cm) space on each side and at the top. Allow for 1" (2.54 cm) of space behind the refrigerator. If your refrigerator has an ice maker, make sure you leave some extra space at the back for the water line connections.

If you are installing your refrigerator next to a fixed wall, leave 2½" (6.3 cm) minimum on the hinge side (some models require more) to allow for the door to swing open.

NOTE: This refrigerator is intended for use in a location where the temperature ranges from a minimum of 55°F (13°C) to a maximum of 110°F (43°C). The preferred room temperature range for optimum performance, which reduces electricity usage and provides superior cooling, is between 60°F (15°C) and 90°F (32°C). It is recommended that you do not install the refrigerator near a heat source, such as an oven or radiator.

®/™ ©2019 Whirlpool. All rights reserved.