Top Mount Refrigerator

PRODUCT MODEL NUMBERS

WRT311FZD WRT541SZD
WRT511SZD

Electrical: A 115-volt, 60-Hz, AC-only, 15- or 20-amp fused, grounded electrical supply is required. It is recommended that a separate circuit serving only your refrigerator be provided. Use an outlet that cannot be turned off by a switch. Do not use an extension cord.

NOTE: Before performing any type of installation, cleaning, or removing a light bulb, turn the control (Thermostat, Refrigerator or Freezer Control depending on the model) to OFF and then disconnect the refrigerator from the electrical source. When you are finished, reconnect the refrigerator to the electrical source and reset the control (Thermostat, Refrigerator or Freezer Control depending on the model) to the desired setting. See "Using the Controls."

Water: A cold water supply with water pressure between 30 and 120 psi (207 and 827 kPa) is required to operate ice maker and water dispenser. If you have questions about your water pressure, call a licensed, qualified plumber.

IMPORTANT: The pressure of the water coming out of a reverse osmosis system going to the water inlet valve of the refrigerator needs to be between 30 and 120 psi (207 and 827 kPa).

Reverse Osmosis Water Supply: If a reverse osmosis water filtration system is connected to your cold water supply, the water pressure to the reverse osmosis system needs to be a minimum of 40 to 60 psi (276 to 414 kPa).

PRODUCT DIMENSIONS

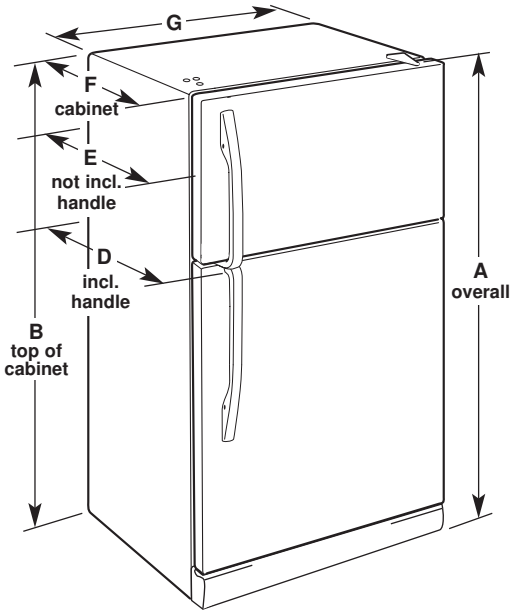

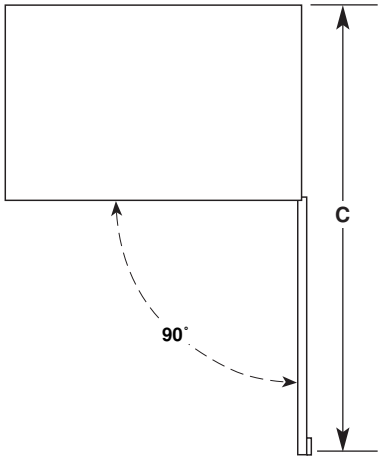

Model Number	Model Size	Reversible Door	Height - Overall "A"	Height - Top of Cabinet "B"	Depth - Door Open 90° "C"	Depth - With Handles "D"	Depth - Without Handles "E"	Depth - Cabinet Only "F"	Width - Cabinet "G"
WRT311FZD	20.5 cu. ft.	Yes	66 1/" (168.3 cm)	65 1/" (166.4 cm)	62 1/" (158.1 cm)	32 7/" (83.5 cm)	30 5/" (77.8 cm)	28 1/" (72.4 cm)	32 3/" (83.2 cm)
WRT511SZD WRT541SZD	21.3 cu. ft.	Yes	66 1/" (168.3 cm)	65 1/" (166.4 cm)	62 1/" (158.1 cm)	34" (86.4 cm)	32 1/" (82.3 cm)	28 1/" (72.4 cm)	32 3/" (83.2 cm)

LOCATION REQUIREMENTS

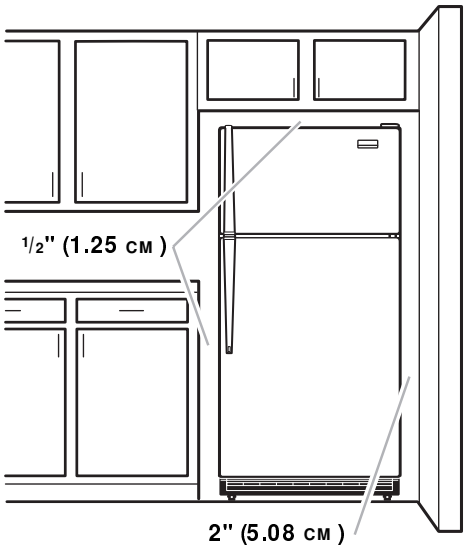

To ensure proper ventilation for your refrigerator, allow for a ½" (1.25 cm) space on each and between overhead cabinets and refrigerator top. Allow at least 1" (2.5 cm) between back of cabinet and the wall. If your refrigerator has an ice maker, make sure you leave some extra space at the back for the water line connections.

If you are installing your refrigerator next to a fixed wall, leave 2" (5 cm) minimum on the hinge side (depending on your model) to allow for the door to swing open.

NOTE: This refrigerator is intended for use in a location where the temperature ranges from a minimum of 55°F (13°C) to a maximum of 110°F (43°C). The preferred room temperature range for optimum performance, which reduces electricity usage and provides superior cooling, is between 60°F (15°C) and 90°F (32°C). It is recommended that you do not install the refrigerator near a heat source, such as an oven or radiator.

Because Whirlpool Corporation policy includes a continuous commitment to improve our products, we reserve the right to change materials and specifications without notice.

Dimensions are for planning purposes only. For complete details, see Installation Instructions packed with product. Specifications subject to change without notice.

Ref. W10674106
10/29/14