KitchenAid®
FOR THE WAY IT'S MADE.®

30" (76.2 cm) Freestanding Electric Range

PRODUCT MODEL NUMBERS

KSEB900E	KSEG700E	KSIB900E

Electrical: If codes permit and a separate ground wire is used, it is recommended that a qualified electrical installer determine that the ground path and wire gauge are in accordance with local codes.

Do not use an extension cord.

To properly install your range, you must determine the type of electrical connection you will be using and follow the instructions provided for it here.

Range must be connected to the proper electrical voltage and frequency as specified on the model/serial number rating plate. The model/serial rating plate is located behind the oven door on the top right-hand side of the oven frame.

This range is manufactured with the neutral terminal connected to the cabinet. Use a 3-wire, UL listed, 40- or 50-amp power supply cord (pigtail) (see following Range Rating chart). If local codes do not permit ground through the neutral, use a 4-wire power supply cord rated at 250 volts, 40 or 50 amps and investigated for use with ranges.

Range Rating*		**Specified Rating of Power Supply Cord Kit and Circuit Protection**
120/240 Volts	**120/208 Volts**	**Amps**
8.8 - 16.5 KW	7.8 - 12.5 KW	40 or 50**
16.6 - 22.5 KW	12.6 - 18.5 KW	50

* The NEC calculated load is less than the total connected load listed on the model/serial rating plate.

** If connecting to a 50-amp circuit, use a 50-amp rated cord with kit. For 50-amp rated cord kits, use kits that specify use with a nominal 1 3/8" (34.9 mm) diameter connection opening.

A circuit breaker is recommended.

PRODUCT DIMENSIONS

This manual covers several models. Your model may appear different from the models depicted. Dimensions given are maximum dimensions across all models.

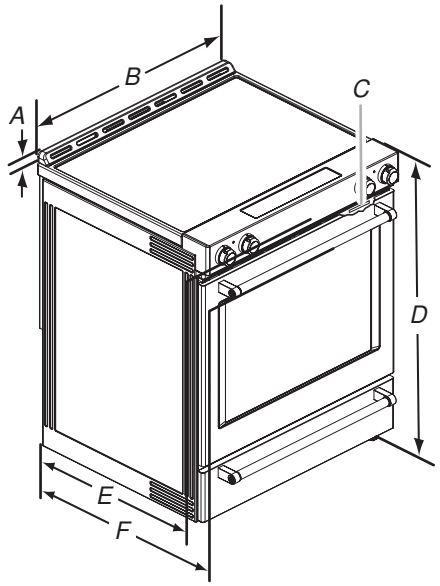

A. 1 3/8" (3.0 cm) height from cooktop to top of vent

B. 29 7/8" (75.9 cm)

C. Model/serial number plate (located behind the oven door on the top right-hand side of the oven frame)

*D. 36" (91.4 cm) height to top of cooktop edge with leveling legs screwed all the way in**

E. 28 5/8" (71.9 cm) max. depth from front of console to back of range.

F. 28 7/8" (73.3 cm) max. depth from handle to back of range.

IMPORTANT: Range must be level after installation. Follow the instructions in the "Level Range" section. Using the cooktop as a reference for leveling the range is not recommended.

* Range can be raised approximately 1" (2.5 cm) by adjusting the leveling legs.

Because Whirlpool Corporation policy includes a continuous commitment to improve our products, we reserve the right to change materials and specifications without notice.

Dimensions are for planning purposes only. For complete details, see Installation Instructions packed with product. Specifications subject to change without notice.

Ref. W10665255B
9/30/14

CABINET OPENING DIMENSIONS

Cabinet opening dimensions shown are for 25" (64.0 cm) countertop depth, 24" (61.0 cm) base cabinet depth and 36" (91.4 cm) countertop height.

IMPORTANT: If installing a range hood or microwave hood combination above the range, follow the range hood or microwave hood combination installation instructions for dimensional clearances above the cooktop surface.

Range may be installed next to combustible walls with zero clearance.

NOTE: When installed in a slide-in cutout, the front of oven door may protrude beyond the base cabinet.

Slide-in Cutout

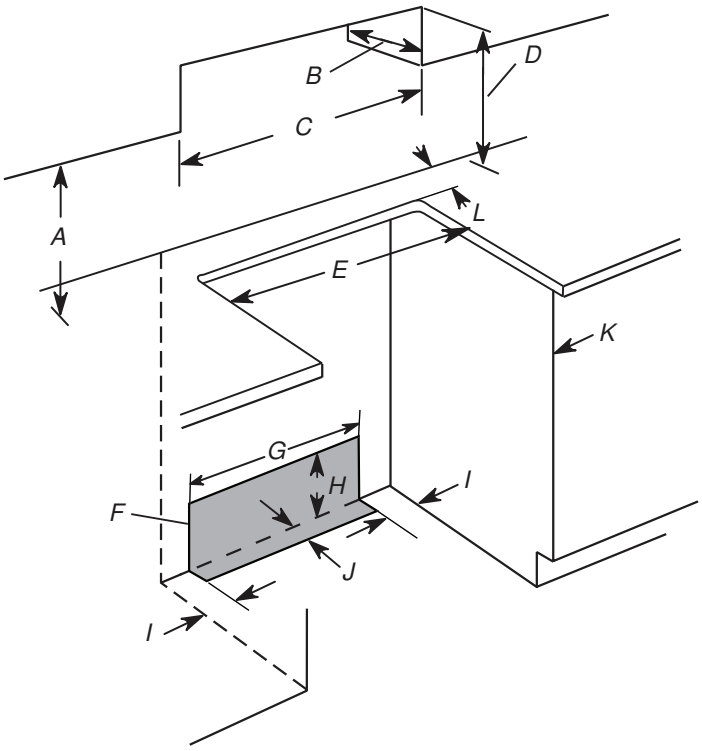

A. 18" (45.7 cm) upper side cabinet to countertop
B. 13" (33 cm) max. upper cabinet depth
C. 30" (76.2 cm) min. opening width
D. For minimum clearance to top of cooktop, see NOTE.*
E. In U.S.A.: 30" (76.2 cm) min. opening width
In Canada: 31" (78.7 cm) min. opening width
F. The shaded area is recommended for installation of grounded outlet.
G. 13⅟" (33.3 cm)
H. 7 11⁄ " (19.5 cm)
I. 4 13⁄ " (12.2 cm)
J. 3 11⁄ " (9.4 cm) or measurement of L, whichever is greater
K. Cabinet door or hinges should not extend into the cutout.
L. Remaining counter depth should not exceed 2¼" (5.7 cm)

Freestanding cutout

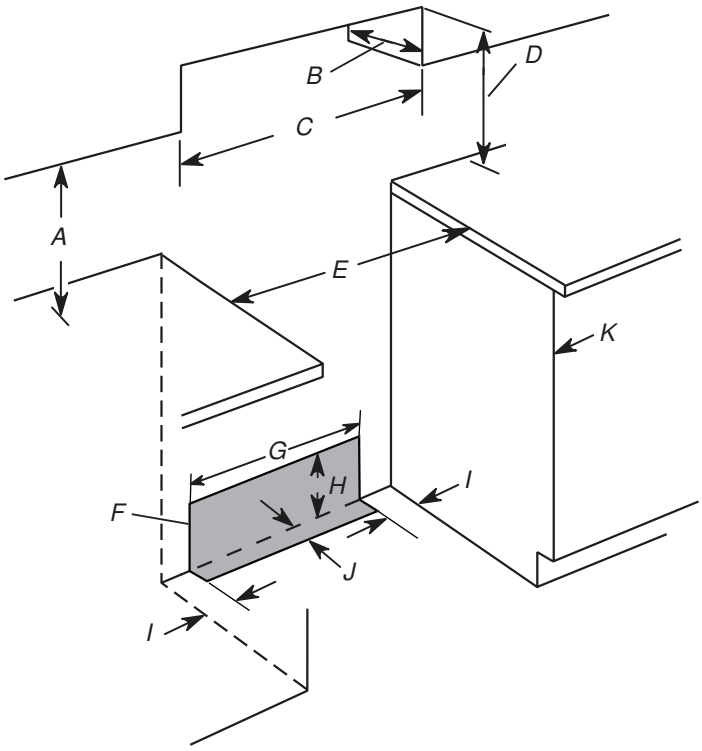

A. 18" (45.7 cm) upper side cabinet to countertop
B. 13" (33 cm) max. upper cabinet depth
C. 30" (76.2 cm) min. opening width
D. For minimum clearance to top of cooktop, see NOTE.*
E. In U.S.A.: 30" (76.2 cm) min. opening width
In Canada: 31" (78.7 cm) min. opening width
F. The shaded area is recommended for installation of grounded outlet.
G. 13⅟" (33.3 cm)
H. 7 11⁄ " (19.5 cm)
I. 4 13⁄ " (12.2 cm)
J. 3 11⁄ " (9.4 cm)
K. Cabinet door or hinges should not extend into the cutout.

* **NOTE:** 24" (61.0 cm) minimum when bottom of wood or metal cabinet is shielded by not less than ⅟" (0.64 cm) flame retardant millboard covered with not less than No. 28 MSG sheet steel, 0.015" (0.4 mm) stainless steel, 0.024" (0.6 mm) aluminum or 0.020" (0.5 mm) copper.

30" (76.2 cm) minimum clearance between the top of the cooking platform and the bottom of an uncovered wood or metal cabinet.

Because Whirlpool Corporation policy includes a continuous commitment to improve our products, we reserve the right to change materials and specifications without notice.

Dimensions are for planning purposes only. For complete details, see Installation Instructions packed with product. Specifications subject to change without notice.

Ref. W10665255B
9/30/14